KHULNA SHIPYARD LIMITED

BANGLADESH NAVY, KHULNA

PHONE : 02-477720003, +8801674-950715

E-mail : oiccomf.ksy@gmail.com

BABE (F) - 337/PPGHMB/2024-2025/01 **07 JANUARY 2024**

Dear Sir

INVITATION FOR QUOTATION OF PIPE & FITTING, GALLY ITEM, HATCH, MANHOLE, BOTTOM PLUG, ZINC ANODE ETC.

1. Khulna Shipyard Limited (KSY) will procure "Pipe & Fitting, Galley Item, Hatch, Manhole, Bottom Plug, Zinc Anode etc." as per attach specification (27 Pages) with relevant drawings (08 Pages), following terms & condition:

2. Please send your offer CFR Chattogram Sea Port basis within **19/01/2025 (1130 Hours)** by **E-mail** or **closed envelop**.

   a) Payment: Payment will be made through Letter of Credit. 80% of the total contract value will be paid against shipping documents and rest 20% will be paid after receiving the material at KSY and satisfactory acceptance.

   b) Shipment: 60 days from the opening date of LC.

   c) FOB value & Ocean freight should be shown separately.

3. 01% (One) Bid Bond/Earnest Money of the total quoted value must be submit with offer. Bid Bond may be Pay Order/Bank Guarantee in favour of KSY.

4. 05% Performance Guarantee (PG) is to be submitted before Purchase Order.

5. Certificate: Supplier must provide manufacturer certificate as regard to the genunity of the source and items.

6. Offer Validity: 30 Days from Tender Opening Date.

Yours sincerely

Sk. Shah Moshiur Rahman
OIC, Commercial Foreign
For Managing Director

Required Galley Items for 2x70 Ton BP Tugboat for PPA

SL.	ITEM DESCRIPTION	QTY	UNIT	Remarks
1.	**Garbage Compactor with Standard Accessories** • Brand: To be Mentioned • Model: To Be Mentioned • All necessary items/ fittings/ accessories needed for Installation • 01 year mandatory Spare Parts should be provided • Country of Origin: Denmark/ Korea/ Italy • Instruction/ Operation manual (English version) be Provided • Commissioning and test-trial should be provided	2	SET	
2.	**Battery Chargers** • Brand: To be Mentioned • Model: To Be Mentioned • Input Voltage: 230 Volt AC • Output Charge Voltage: 28.5 V DC (Absorption) 26.5 V DC (Float) Output Charge Current: 50 Amp • Battery Capacity: 400 AH (Minimum) • Dimension: Compact size will be preferable to be mentioned • Weight: To be mentioned • **Safety Standard**: EN 60335-1, EN 60335-2-29, IEC 60945 or to be mentioned • **Ingress Protection**: IP 21 • Protection Features: 1) Output Short Circuit 2) Battery Reverse Polarity Detection 3) Overvoltage Protection 4) Over temperature Protection 5) Battery full charge auto cut. • Country of Origin: EU Country • Country of Manufacture: EU Country	2	SET	
3.	**Battery Charger** • Brand: To be Mentioned • Model: To Be Mentioned • Input Voltage: 230 Volt AC • Output Charge Voltage: 28.5 V DC (Absorption) 26.5 V DC (Float) Output Charge Current: 30 Amp • Battery Capacity: 150 AH (Minimum) • Dimension: Compact size will be preferable to be mentioned • Weight: To be mentioned • **Safety Standard**: EN 60335-1, EN 60335-2-29, IEC 60945 or to be mentioned • **Ingress Protection**: IP 21 • Protection Features: 1) Output Short Circuit	2	SET	

SL.	ITEM DESCRIPTION	QTY	UNIT	Remarks
	2) Battery Reverse Polarity Detection 3) Overvoltage Protection & 4) Over temperature Protection 5) Battery full charge auto cut • Country of Origin: EU Country • Country of Manufacture: EU Country			
4.	**Battery Charger** • Brand: To be Mentioned • Model: To Be Mentioned • Input Voltage: 230 Volt AC • Output Charge Voltage: 28.5 V DC (Absorption) 26.5 V DC (Float) Output Charge Current: 100 Amp • Battery Capacity: 800 AH (Minimum) • Dimension: Compact size will be preferable to be mentioned • Weight: To be mentioned • **Safety Standard**: EN 60335-1, EN 60335-2-29, IEC 60945 or to be mentioned • **Ingress Protection**: IP 21 • Protection Features: 1) Output Short Circuit 2) Battery Reverse Polarity Detection 3) Overvoltage Protection 4) Over temperature Protection 5) Battery full charge auto cut. • Country of Origin: EU Country • Country of Manufacture: EU Country	2	SET	
5.	**Aluminum Gangway with Removable Stanchions and Safety Net** • Type: Portable • Length: 5 Meter • Material: Marine Standard • Manufacture/ Brand: To be mentioned • With BV/CSS or any other Class Type Approval • Country of Manufacturing: Bangladesh/ China	2	SET	**Drawing Attached**
6.	**Marine Flat Type Glass Level Gauge** • Range: 0-2000 mm (L) • Fluid: Fuel Oil • Material: Marine Standard • Max. Operating Pressure: 3 bar • Max. Operating Temperature: 60º C • Density: 890 ~ 900 kg/m^3 • Brand: To be mentioned • Model: To be mentioned • With BV Type Approval • Country of Origin: China	4	SET	
7.	**Marine Flat Type Glass Level Gauge** • Range: 0-2100mm(L) • Fluid: Fuel Oil • Material: Marine Standard	4	SET	

SL.	ITEM DESCRIPTION	QTY	UNIT	Remarks
	• Max. Operating Pressure: 3 bar • Max. Operating Temperature: 60º C • Density: 890 ~ 900 kg/m^3 • Brand: To be mentioned • Model: To be mentioned • With BV Type Approval • Country of Origin: China			
8.	**Marine Flat Type Glass Level Gauge** • Range: 0 - 2640mm (L) • Fluid: Lube Oil • Material: Marine Standard • Max. Operating Pressure: 3 bar • Max. Operating Temperature: 60º C • Density: 880 ~ 890 kg/m^3 • Brand: To be mentioned • Model: To be mentioned • With BV Type Approval • Country of Origin: China	4	SET	
9.	**Marine Flat Type Glass Level Gauge** • Range: 0 - 600mm (L) • Fluid: Fresh Water • Material: Marine Standard • Max. Operating Pressure: 3 bar • Max. Operating Temperature: 78º C • Density: 1000 kg/m^3 • Brand: To be mentioned • Model: To be mentioned • With BV Type Approval • Country of Origin: China	4	SET	
10.	**Stainless Steel Combined Refrigerator and Freezer** • Capacity: 700 Liter • Top Temperature Range: -2 + 8 • Bottom Temperature Range: -18 + 22 • Power Consumption: 0.72kW • Dimensions: To be mentioned • Brand: To be mentioned • Model: To be mentioned • Country of Manufacturing: Bangladesh/ China/ Korea	2	SET	
11.	**Electric Cooking Range with Four (04) Hot Plates** (Total 16KW and One (01) Oven of Auto-Thermal Control Type with Built-in Switch) • Hotplate Dimensions: To be mentioned • Temperature Range: To be mentioned • Power Consumption: To be mentioned • Dimensions: To be mentioned • Brand: To be mentioned • Model: To be mentioned • Country of Origin: Italy/ Korea	2	SET	

SL.	ITEM DESCRIPTION	QTY	UNIT	Remarks
12.	**Electric Mixer with Necessary Attachments** • Type: Wet Grinder • Capacity: 20 Liters • Dimensions: To be mentioned • Brand: To be mentioned • Model: To be mentioned • Country of Origin: Malaysia/ Italy/ Korea	2	SET	
13.	**Electric Water Boiler of Stainless Steel** • Power: To be mentioned • Capacity: Minimum 20.7 Liters • Dimensions: To be mentioned • Brand: To be mentioned • Model: To be mentioned • Country of Origin: Netherland/ Italy/ Korea	2	SET	
14.	**Electric Toaster** • Capacity: 4 Slots • Dimensions: To be mentioned • Brand: To be mentioned • Model: To be mentioned • Country of Origin: Malaysia/ Italy/ Korea	4	SET	

Required A Bollard for 2x70 Ton PPA Tugboat

Sl. No.	Description	Quantity	Unit	Remarks
1.	**A Bollard**	04	Pcs	**Required BV Certificate**
	The A Bollard/ towing posts of welded pipe construction shall be fitted on main deck for aft towing winch and forward windlass/ towing winch. A Bollard and Deck shall be adequately stiffened. It will be consists of following:			
	a. FWD Towing Post - 02 Pcs (as per attached drawing)			
	b. AFT Towing Post – 02 Pcs (as per attached drawing)			

REQUIRED MATERIAL FOR 2X70 TON PPA TUGBOAT

SL.	Name	Qty / Pcs	Remarks
1.	Various Manholes With standard fittings. (As per attached drawing)	132	
2.	Various hatches with standard fittings. (As per attached drawing)	10	**Required BV Class Certificate**
3.	Various Bottom Plugs with standard accessories (As per attached drawing)	62	
4.	Zinc Anode with Standard accessories	172	

SL.	Name	Qty / Pcs	Remarks
	Size: 300 x150 x 40 mm Gross Weight: 11.4 kg with 2 sets studs, nuts & 1 rubber plate		

Required Various Ropes for 2x70 Ton PPA Tugboat

SL	Description	Qty	Deno	Remarks
01	Steel wire rope sling, inner end is plain, the outer end with hard eye formed by a heavy duty thimble and pressed by steel ferrule, wll 42 tons, mbl 210 tons 8xk36ws-pwrc(k), 1960mpa, galvanized diameter 50mm x sling length 500meters	02	PCS	Required BV Certificate
02	High strength (ultra-high molecular weight polyethylene rope) mbl 132tons, soft eyes on both ends 12-strand structure diameter 60mm x sling length 200meters	02	PCS	

Required Pipe and fittings item for 2x70 Ton BP Tug Boat Project

Sl. No.	Description	Quantity (2 ships)	Unit	Class/ Certificate
1	DN500 PIPE 508 OD x 20.62 mm Wall (BW), SCH60, CS, BLACK., 106 GR.B (SMLS)	5.8	Meter	BV
2	DN450 PIPE 457.2 OD x 6.35 mm Wall (BW), SCH10, CS, BLACK., 106 GR.B (SMLS)	27	Meter	Manufacturer Certificate
3	DN350 PIPE 355.6 OD x 11.13 mm Wall (BW), SCH40, CS, BLACK., 106 GR.B (SMLS)	49	Meter	Manufacturer Certificate
4	DN250 PIPE 273.05 OD x 15.09 mm Wall (BW), SCH80, CS, BLACK., 106 GR.B (SMLS);	11.6	Meter	BV
5	DN250 PIPE 273.1 OD x 9.27 mm Wall (BW), SCH40, CS, BLACK., 106 GR.B (SMLS)	5.8	Meter	Manufacturer Certificate
6	DN200 PIPE 219.1 OD x 18.26 mm Wall (BW), SCH120, CS, BLACK., 106 GR.B(SMLS)	5.8	Meter	Manufacturer Certificate
7	DN200 PIPE 219.1 OD x 18.26 mm Wall (BW), SCH120, CS, BLACK., 106 GR.B (SMLS)			Manufacturer Certificate
8	DN200 PIPE 219.1 OD x 8.18 mm Wall (BW), SCH40, CS, BLACK., 106 GR.B (SMLS)	15	Meter	Manufacturer Certificate
9	DN150 PIPE 168.3 OD x 10.97 mm Wall (BW), SCH80, CS, BLACK., 106 GR.B (SMLS)	11	Meter	Manufacturer Certificate
10	DN150 PIPE 168.3 OD x 10.97 mm Wall (BW), SCH80, CS, BLACK., 106 GR.B (SMLS)	5.8	Meter	Manufacturer Certificate
11	DN150 PIPE 168.3 OD x 10.97 mm Wall (BW), SCH80, CS, BLACK., 106 GR.B (SMLS)			Manufacturer Certificate
12	DN150 PIPE 168.3 OD x 7.11 mm Wall (BW), SCH40, CS, BLACK., 106 GR.B (SMLS)	48	Meter	Manufacturer Certificate

Sl. No.	Description	Quantity (2 ships)	Unit	Class/ Certificate
13	DN150 PIPE 168.3 OD x 7.11 mm Wall (BW), SCH40, CS, BLACK., 106 GR.B (SMLS)	14	Meter	Manufacturer Certificate
14	DN125 PIPE 141.3 OD x 9.53 mm Wall (BW), SCH80, CS, BLACK., 106 GR.B (SMLS)	31	Meter	Manufacturer Certificate
15	DN125 PIPE 141.3 OD x 9.53 mm Wall (BW), SCH80, CS, BLACK., 106 GR.B (SMLS)	41	Meter	Manufacturer Certificate
16	DN125 PIPE 141.3 OD x 6.55 mm Wall (BW), SCH40, CS, BLACK., 106 GR.B (SMLS)	14	Meter	Manufacturer Certificate
17	DN125 PIPE 141.3 OD x 6.55 mm Wall (BW), SCH40, CS, BLACK., 106 GR.B (SMLS)	38	Meter	Manufacturer Certificate
18	DN100 PIPE 114.30 OD x 8.56 mm Wall (BW), SCH80, CS, BLACK., 106 GR.B (SMLS)	216	Meter	Manufacturer Certificate
19	DN100 PIPE 114.30 OD x 8.56 mm Wall (BW), SCH80, CS, BLACK., 106 GR.B (SMLS)	11.6	Meter	BV
20	DN100 PIPE 114.30 OD x 8.56 mm Wall (BW), SCH80, CS, BLACK., 106 GR.B (SMLS)	182	Meter	Manufacturer Certificate
21	DN100 PIPE 114.3 OD x 6.02 mm Wall (BW), SCH40, CS, BLACK., 106 GR.B (SMLS)	73	Meter	Manufacturer Certificate
22	DN100 PIPE 114.3 OD x 6.02 mm Wall (BW), SCH40, CS, BLACK., 106 GR.B (SMLS)	19	Meter	Manufacturer Certificate
23	DN80 PIPE 88.9 OD x 7.62 mm Wall (BW), SCH80, CS, BLACK., 106 GR.B (SMLS)	374	Meter	Manufacturer Certificate
24	DN80 PIPE 88.9 OD x 7.62 mm Wall (BW), SCH80, CS, BLACK., 106 GR.B (SMLS)	94	Meter	Manufacturer Certificate
25	DN80 PIPE 88.9 OD x 7.62 mm Wall (BW), SCH80, CS, BLACK., 106 GR.B (SMLS)			Manufacturer Certificate
26	DN80 PIPE 88.9 OD x 5.49 mm Wall (BW), SCH40, CS, BLACK., 106 GR.B (SMLS)	453	Meter	Manufacturer Certificate
27	DN80 PIPE 88.9 OD x 5.49 mm Wall (BW), SCH40, CS, BLACK., 106 GR.B (SMLS)	19	Meter	Manufacturer Certificate
28	DN65 PIPE 73 OD x 7.01 mm Wall (BW), SCH80, CS, BLACK., 106 GR.B (SMLS)	261	Meter	Manufacturer Certificate
29	DN65 PIPE 73 OD x 7.01 mm Wall (BW), SCH80, CS, BLACK., 106 GR.B (SMLS)	522	Meter	Manufacturer Certificate
30	DN65 PIPE 73 OD x 7.01 mm Wall (BW), SCH80, CS, BLACK., 106 GR.B (SMLS)			Manufacturer Certificate
31	DN65 PIPE 73 OD x 5.16 mm Wall (BW), SCH40, CS, BLACK., 106 GR.B (SMLS)	308	Meter	Manufacturer Certificate
32	DN65 PIPE 73 OD x 5.16 mm Wall (BW), SCH40, CS, BLACK., 106 GR.B (SMLS)	60	Meter	Manufacturer Certificate
33	DN50 PIPE 60.30 OD x 5.54 mm Wall (BW), SCH80, CS, BLACK., 106 GR.B (SMLS)	155	Meter	Manufacturer Certificate
34	DN50 PIPE 60.30 OD x 5.54 mm Wall (BW), SCH80, CS, BLACK., 106 GR.B (SMLS)	135	Meter	Manufacturer Certificate
35	DN50 PIPE 60.30 OD x 3.91 mm Wall (BW), SCH40, CS, BLACK., 106 GR.B (SMLS)	132	Meter	Manufacturer Certificate
36	DN50 PIPE 60.30 OD x 3.91 mm Wall (BW), SCH40, CS, BLACK.106 GR.B (SMLS)	93	Meter	Manufacturer Certificate
37	DN40 PIPE 48.3 OD x 5.08 mm Wall (BW), SCH80, CS, BLACK., 106 GR.B (SMLS)	7	Meter	Manufacturer Certificate
38	DN40 PIPE 48.3 OD x 5.08 mm Wall (BW), SCH80, CS, BLACK., 106 GR.B (SMLS)			Manufacturer Certificate
39	DN32 PIPE 42.2 OD x 4.85 mm Wall (BW), SCH80, CS, BLACK., 106 GR.B (SMLS)	9	Meter	Manufacturer Certificate

Sl. No.	Description	Quantity (2 ships)	Unit	Class/ Certificate
40	Air Vent, Sounding & Filling System, DN-40 Pipe, SCHD 40; Seamless, PN10, OD48.3*thk.3.68mm,Black,ASTM GRADE-106 B	204	MTR	Manufacturer Certificate
41	Air Vent, Sounding & Filling System, DN-40 Pipe, SCHD 40; Seamless, PN10, OD48.3*thk.3.68mm,Black,ASTM GRADE-106 B	144	MTR	Manufacturer Certificate
42	Air Vent, Sounding & Filling System, DN-40 Pipe, SCHD 80; Seamless, PN10, OD48.3*thk.5.08mm,Black,ASTM GRADE-106 B	12	MTR	Manufacturer Certificate
43	Air Vent, Sounding & Filling System, DN-40 Pipe, SCHD 80; Seamless, PN10, OD48.3*thk.5.08mm,Black,ASTM GRADE-106 B	12	MTR	Manufacturer Certificate
44	Bilge, Ballast & Fire Main,DN-40 Pipe,SCHD- 80; Seamless, PN10, OD48.3*thk.5.08mm, Black, ASTM GRADE-106 B	60	MTR	Manufacturer Certificate
45	Oily Bilge System, DN-40 Pipe, SCHD- 40; Seamless, PN10, OD48.3*thk.3.68mm, Black, ASTM GRADE-106 B	132	MTR	Manufacturer Certificate
46	Oily Bilge System, DN-32 Pipe, SCHD- 40; Seamless, PN10, OD42.2*thk.3.56mm, Black, ASTM GRADE-106 B	60	MTR	Manufacturer Certificate
47	Oily Bilge System, DN-25 Pipe, SCHD- 40; Seamless, PN10, OD33.4*thk.3.38mm, Black, ASTM GRADE-106 B	48	MTR	Manufacturer Certificate
48	Oily Bilge System, DN-20 Pipe, SCHD- 40; Seamless, PN10, OD26.7*thk.2.87mm, Black, ASTM GRADE-106 B	12	MTR	Manufacturer Certificate
49	Oily Bilge System, DN-15 Pipe, SCHD- 40; Seamless, PN10, OD21.3*thk.2.77mm, Black, ASTM GRADE-106 B	72	MTR	Manufacturer Certificate
50	Lub Oil System, DN-40 Pipe, SCHD- 80; Seamless, PN10, OD48.3*thk.5.08mm, Black, ASTM GRADE-106 B	156	MTR	Manufacturer Certificate
51	Lub Oil System, DN-32 Pipe,SCHD- 80; Seamless PN10, OD42.2*thk.4.85mm, Black, ASTM GRADE-106 B	24	MTR	Manufacturer Certificate
52	Lub Oil System, DN-15 Pipe, SCHD- 80; Seamless PN10, OD21.3*thk.3.73mm, Black, ASTM GRADE-106 B	49	MTR	Manufacturer Certificate
53	FO Service & OF System, DN-40 Pipe, SCHD- 80; Seamless, PN10, OD48.3*thk.5.08mm, Black, ASTM GRADE-106 B	12	MTR	Manufacturer Certificate
54	FO Service & OF System, DN-32 Pipe, SCHD- 80; Seamless, PN10, OD42.2*thk.4.85mm, Black, ASTM GRADE-106 B	36	MTR	Manufacturer Certificate
55	FO Service & OF System, DN-25 Pipe, SCHD- 80; Seamless, PN10, OD33.4*thk.4.55mm, Black, ASTM GRADE-106 B	96	MTR	Manufacturer Certificate
56	FO Service & OF System, DN-20 Pipe, SCHD- 80; Seamless, PN10, OD26.7*thk.3.91mm, Black, ASTM GRADE-106 B	84	MTR	Manufacturer Certificate
57	FO Service & OF System, DN-15 Pipe, SCHD- 80; Seamless, PN10, OD21.3*thk.3.73mm, Black, ASTM GRADE-106 B	84	MTR	Manufacturer Certificate

Sl. No.	Description	Quantity (2 ships)	Unit	Class/ Certificate
58	FO Transfer System, DN-25 Pipe, SCHD-80; Seamless, PN10, OD33.4*thk.4.55mm, Black, ASTM GRADE-106 B	24	MTR	Manufacturer Certificate
59	FO Transfer System, DN-15 Pipe, SCHD-80; Seamless, PN10, OD21.3*thk.3.73mm, Black, ASTM GRADE-106 B	120	MTR	Manufacturer Certificate
60	Domestic FW/HW/SW System, DN-32 Pipe, SCHD-80; Seamless, PN10, OD42.2*thk.4.85mm, Black, ASTM GRADE-106 B	228	MTR	Manufacturer Certificate
61	Domestic FW/HW/SW System, DN-25 Pipe, SCHD-80; Seamless, PN10, OD33.4*thk.4.55mm, Black, ASTM GRADE-106 B	240	MTR	Manufacturer Certificate
62	Domestic FW/HW/SW System, DN-15 Pipe, SCHD-80; Seamless, PN10, OD21.3*thk.3.73mm, Black, ASTM GRADE-106 B	36	MTR	Manufacturer Certificate
63	Domestic FW/HW/SW System, Ø12mm Pipe, SCHD- 80; Seamless, PN10, OD12*thk.2.5mm, Black, ASTM GRADE-106 B	144	MTR	Manufacturer Certificate
64	Domestic FW/HW/SW System, Ø8mm Pipe, SCHD-80; Seamless, PN10, OD8*thk.2mm, Black, ASTM GRADE- 106 B	48	MTR	Manufacturer Certificate
65	Domestic Black/Grey water System, DN-40 Pipe, SCHD- 80; Seamless, PN10, OD48.3*thk.5.08mm, Black, ASTM GRADE-106 B	180	MTR	Manufacturer Certificate
66	Domestic Black/Grey water System, DN-32 Pipe, SCHD- 80; Seamless, PN10, OD42.2*thk.4.85mm, Black, ASTM GRADE-106 B	192	MTR	Manufacturer Certificate
67	Compressed Air System, DN-40 Pipe, SCHD- 40; Seamless, PN10, OD48.3*thk.3.68mm, Black, ASTM GRADE-106 B	96	MTR	Manufacturer Certificate
68	Compressed Air System, DN-25 Pipe, SCHD- 40; Seamless, PN10, OD33.4*thk.3.38mm, Black, ASTM GRADE-106 B	156	MTR	Manufacturer Certificate
69	Compressed Air System, DN-15 Pipe, SCHD- 40; Seamless, PN10, OD21.3*thk.2.77mm, Black, ASTM GRADE-106 B	180	MTR	Manufacturer Certificate
70	M/E Central Cooling, DN-40 Pipe, SCHD-40; Seamless, PN10, OD48.3*thk.3.68mm, Black, ASTM GRADE-106 B	48	MTR	Manufacturer Certificate
71	M/E Central Cooling, DN-32 Pipe SCHD- 80; Seamless, PN10, OD42.2*thk.4.85mm, Black, ASTM GRADE-106 B	24	MTR	Manufacturer Certificate
72	M/E Central Cooling, DN-20 Pipe, SCHD- 40; Seamless, PN10, OD26.7*thk.2.87mm, Black, ASTM GRADE-106 B	48	MTR	Manufacturer Certificate
73	M/E Central Cooling, DN-15 Pipe, SCHD- 40; Seamless, PN10, OD21.3*thk.2.77mm, Black, ASTM GRADE-106 B	36	MTR	Manufacturer Certificate
74	Auxiliary Central Cooling,DN-40 Pipe,SCHD- 80; Seamless, PN10, OD48.3*thk.5.08mm, Black, ASTM GRADE-106 B	60	MTR	Manufacturer Certificate
75	Pipe, ASTM A106 Gr.B OD33.4*thk.3.38mm, black	127	Meter	Manufacturer Certificate
76	PIPE OD60.3*thk.5.54mm, ASTM A106 Gr.B, CS	7	Meter	Manufacturer Certificate

Sl. No.	Description	Quantity (2 ships)	Unit	Class/ Certificate
77	PIPE OD60.3*thk.5.54mm, ASTM A106 Gr.B, CS			Manufacturer Certificate
78	PIPE OD60.3*thk.5.54mm, ASTM A106 Gr.B, CS			Manufacturer Certificate
79	PIPE OD73*thk.5.16mm, ASTM A106 Gr.B, CS	53	Meter	Manufacturer Certificate
80	PIPE OD73*thk.5.16mm, ASTM A106 Gr.B, CS			Manufacturer Certificate
81	PIPE OD73*thk.5.16mm, ASTM A106 Gr.B, CS			Manufacturer Certificate
82	PIPE OD73*thk.5.16mm, ASTM A106 Gr.B, CS			Manufacturer Certificate
83	PIPE OD73*thk.5.16mm, ASTM A106 Gr.B, CS			Manufacturer Certificate
84	PIPE OD114.3*thk.8.56mm, ASTM A106 Gr.B, CS	20	Meter	Manufacturer Certificate
85	PIPE OD114.3*thk.8.56mm, ASTM A106 Gr.B, CS			Manufacturer Certificate
86	PIPE OD219.1*thk.12.7mm, ASTM A106 Gr.B, CS	17	Meter	Manufacturer Certificate
87	PIPE OD273.1*thk.15.09mm, ASTM A106 Gr.B, CS	8	Meter	Manufacturer Certificate
88	CABLE PIPE 100 A, SCH40, OD114.3*thk.6.02mm, ASTM A106 Gr.B, CS	24	Meter	Manufacturer Certificate
89	Handrail pipe, ASTM A106 Gr.B, OD42.2*4.85mm, black	187	Meter	Manufacturer Certificate
90	Handrail pipe, ASTM A106 Gr.B, OD89*7.62mm, black	7	Meter	Manufacturer Certificate
91	Handrail pipe, ASTM A106 Gr.B, OD114.3*8.56mm, black	21	Meter	Manufacturer Certificate
92	DN125, PIPE 141.29 OD X 9.5 MM WALL (BW), SCH80, CuNi 90/10	0.3	Meter	Manufacturer Certificate
93	DN80, PIPE 88.9 OD x 5.5 mm Wall (BW), SCH40, CuNi 90/10	120	Meter	Manufacturer Certificate
94	DN65, PIPE 73 OD x 5.2 mm Wall (BW), SCH40, CuNi 90/10	41	Meter	Manufacturer Certificate
95	DN50, PIPE 60.3 OD x 3.9 mm Wall (BW), SCH40, CuNi 90/10	31	Meter	Manufacturer Certificate
96	DN40, PIPE 48.3 OD x 3.7 mm Wall (BW), SCH40, CuNi 90/10	0.3	Meter	Manufacturer Certificate
97	DN250 GATE VALVE FLG, JIS 5K, CAST STEEL	4	PCS	BV
98	DN150 GATE VALVE (FLG), JIS 16K, CI	2	PCS	Manufacturer Certificate
99	DN125 GATE VALVE FLG, JIS 5K, CI	4	PCS	Manufacturer Certificate
100	DN100 GATE VALVE FLG, JIS 5K, CI	28	PCS	Manufacturer Certificate
101	DN100 GATE VALVE FLG, JIS 10K, CI	4	PCS	Manufacturer Certificate
102	DN80 GATE VALVE (FLG), JIS 16K, CI	2	PCS	Manufacturer Certificate
103	DN80 GATE VALVE FLG, JIS 5K, CI	84	PCS	Manufacturer Certificate

Sl. No.	Description	Quantity (2 ships)	Unit	Class/ Certificate
104	DN80 GATE VALVE FLG, JIS 5K, CAST STEEL;	2	PCS	BV
105	DN65 GATE VALVE FLG, JIS 5K, CI	46	PCS	Manufacturer Certificate
106	DN 65 GATE VALVE FLG., JIS 5K, CAST STEEL	8	PCS	BV
107	DN50 GATE VALVE FLG, JIS 5K, CI	28	PCS	Manufacturer Certificate
108	DN100 SWING CHECK VALVE FLG, JIS 5K, CI	10	PCS	Manufacturer Certificate
109	DN80 SWING CHECK VALVE FLG, JIS 5K, CI	12	PCS	Manufacturer Certificate
110	DN65 SWING CHECK VALVE FLG, JIS 5K, CI	8	PCS	Manufacturer Certificate
111	DN50 SWING CHECK VALVE FLG, JIS 5K, CI	6	PCS	Manufacturer Certificate
112	DN100 SDNR VALVE FLG, JIS 5K, CI	12	PCS	Manufacturer Certificate
113	DN100 SDNR VALVE FLG, JIS 10K, CI	4	PCS	Manufacturer Certificate
114	DN80 SDNR VALVE FLG, JIS 5K, CI	34	PCS	Manufacturer Certificate
115	DN80 SDNR VALVE FLG, JIS 5K, CAST STEEL	12	PCS	BV
116	DN65 SDNR VALVE FLG, JIS 5K, CI	44	PCS	Manufacturer Certificate
117	DN65 SDNR VALVE FLG, JIS 5K, CAST STEEL	6	PCS	BV
118	DN50 SDNR VALVE FLG, JIS 5K, CI	6	PCS	Manufacturer Certificate
119	DN65 SDNR GLOBE VALVE FLG, JIS 5K, CI	8	PCS	Manufacturer Certificate
120	DN100 ANGLE SDNR FLG, JIS 5K, CAST STEEL	4	PCS	BV
121	DN80 ANGLE SDNR FLG, JIS 5K, CAST STEEL	4	PCS	BV
122	DN250 BUTTERFLY VALVE WAFER, JIS 5K, CI	4	PCS	Manufacturer Certificate
123	DN150 BUTTERFLY VALVE (WAFER), DIN PN16, CI	4	PCS	Manufacturer Certificate
124	DN125 BUTTERFLY VALVE (WAFER), DIN PN16, CI	4	PCS	Manufacturer Certificate
125	DN100 BUTTERFLY VALVE WAFER, JIS 5K, CI	20	PCS	Manufacturer Certificate
126	DN80 BUTTERFLY VALVE WAFER, JIS 5K, CI	4	PCS	Manufacturer Certificate
127	DN80 BUTTERFLY VALVE (WAFER), DIN PN16, CI	8	PCS	Manufacturer Certificate
128	DN50 BUTTERFLY VALVE (WAFER), DIN PN16, CI	4	PCS	Manufacturer Certificate
129	DN150 BUTTERFLY VALVE LUG, JIS 5K, CAST STEEL	4	PCS	BV
130	DN100 BUTTERFLY VALVE FLG, JIS 5K, CI	2	PCS	Manufacturer Certificate

Sl. No.	Description	Quantity (2 ships)	Unit	Class/ Certificate
131	DN65 BUTTERFLY VALVE (LUG), DIN PN16, CAST STEEL	4	PCS	BV
132	DN125 CHECK VALVE, JIS 16K, CI	4	PCS	Manufacturer Certificate
133	DN100 GLOBE VALVE FLG, JIS 10K, CI	4	PCS	Manufacturer Certificate
134	DN 65 ANGLE HOSE VALVE FLG, JIS 5K, BRONZE	16	PCS	Manufacturer Certificate
135	DN80 ANGLE STORM VALVE FLG, JIS 5K, CAST STEEL	2	PCS	BV
136	DN50 PRESSURE RELIEF VALVE, JIS 5K, CI	2	PCS	Manufacturer Certificate
137	DN40 QUICK-CLOSING VALVE FLG, JIS 5K, CAST STEEL, WIRE PULL	10	PCS	BV
138	DN65 QUICK-CLOSING VALVE FLG, JIS 5K, CAST STEEL, WIRE PULL	20	PCS	BV
139	DN100 ANGLE STORM VALVE FLG, JIS 5K, CAST STEEL	2	PCS	BV
140	DN450 FLANGE, FL FF SO (BW), JIS 5K; carbon steel	18	PCS	Manufacturer Certificate
141	DN350 FLANGE FL FF SO (BW), DIN PN16; carbon steel	36	PCS	Manufacturer Certificate
142	DN350 FLANGE FL FF SO (BW), DIN PN10; carbon steel	8	PCS	Manufacturer Certificate
143	DN250 FLANGE, FL FF SO (BW), JIS 5K; carbon steel	8	PCS	BV
144	DN250 FLANGE FL FF SO (BW), DIN PN25; carbon steel	4	PCS	Manufacturer Certificate
145	DN250 FLANGE FL FF SO (BW), DIN PN16; carbon steel	8	PCS	Manufacturer Certificate
146	DN150 FLANGE FL FF SO (BW), JIS 16K; carbon steel	4	PCS	Manufacturer Certificate
147	DN150 FLANGE, FL FF SO (BW), JIS 5K; carbon steel	68	PCS	Manufacturer Certificate
148	DN150 FLANGE, FL FF SO (BW), JIS 5K; carbon steel	4	PCS	BV
149	DN150 FLANGE FL FF SO (BW), DIN PN20; carbon steel	8	PCS	Manufacturer Certificate
150	DN150 FLANGE FL FF SO (BW), DIN PN16; carbon steel	16	PCS	Manufacturer Certificate
151	DN150 FLANGE, FL FF SO (BW), DIN PN10; carbon steel	8	PCS	Manufacturer Certificate
152	DN150 FLANGE FL FF SO (BW), DIN PN6; carbon steel	8	PCS	Manufacturer Certificate
153	DN125 FLANGE, FL FF SO (BW), JIS 16K; carbon steel	8	PCS	Manufacturer Certificate
154	DN125 FLANGE, FL FF SO (BW), JIS 5K; carbon steel	128	PCS	Manufacturer Certificate
155	DN125 FLANGE, FL FF SO (BW), DIN PN16; carbon steel	8	PCS	Manufacturer Certificate
156	DN125 FLANGE, FL FF SO (BW), DIN PN10; carbon steel	2	PCS	Manufacturer Certificate
157	DN125 FLANGE, FL FF SO (BW), DIN PN6; carbon steel	4	PCS	Manufacturer Certificate

Sl. No.	Description	Quantity (2 ships)	Unit	Class/ Certificate
158	DN100 FLANGE, FL FF SO (BW), JIS 5K; carbon steel	460	PCS	Manufacturer Certificate
159	DN100 FLANGE, FL FF SO (BW), JIS 10K; carbon steel	128	PCS	Manufacturer Certificate
160	DN100 FLANGE, FL FF SO (BW), JIS 5K; carbon steel	6	PCS	BV
161	DN100 FLANGE, FL FF SO (BW), DIN PN16; carbon steel	4	PCS	Manufacturer Certificate
162	DN100 FLANGE, FL FF SO (BW), DIN PN6; carbon steel	20	PCS	Manufacturer Certificate
163	DN100 FLANGE, FL FF SO (BW), ANSI 150; carbon steel	12	PCS	Manufacturer Certificate
164	DN80 FLANGE, FL FF SO (BW), JIS 16K; carbon steel	4	PCS	Manufacturer Certificate
165	DN80 FLANGE, FL FF SO (BW), JIS 5K; carbon steel	986	PCS	Manufacturer Certificate
166	DN80 FLANGE, FL FF SO (BW), JIS 10K; carbon steel	66	PCS	Manufacturer Certificate
167	DN80 FLANGE, FL FF SO (BW), JIS 5K; carbon steel	24	PCS	BV
168	DN80 FLANGE, FL FF SO (BW), DIN PN16; carbon steel	66	PCS	Manufacturer Certificate
169	DN80 FLANGE, FL FF SO (BW), DIN PN6; carbon steel	28	PCS	Manufacturer Certificate
170	DN80 FLANGE, FL FF SO (BW), ANSI 150; carbon steel	6	PCS	Manufacturer Certificate
171	DN65 FLANGE, FL FF SO (BW), JIS 5K; carbon steel	1686	PCS	Manufacturer Certificate
172	DN65 FLANGE, FL FF SO (BW), JIS 10K; carbon steel	52	PCS	Manufacturer Certificate
173	DN65 FLANGE, FL FF SO (BW), JIS 5K; carbon steel	12	PCS	BV
174	DN65 FLANGE, FL FF SO (BW), DIN PN16; carbon steel	20	PCS	Manufacturer Certificate
175	DN65 FLANGE, FL FF SO (BW), DIN PN16; carbon steel	12	PCS	BV
176	DN65 FLANGE, FL FF SO (BW), DIN PN10; carbon steel	2	PCS	Manufacturer Certificate
177	DN65 FLANGE, FL FF SO (BW), DIN PN6; carbon steel	4	PCS	Manufacturer Certificate
178	DN50 FLANGE, FL FF SO (BW), JIS 5K; carbon steel	688	PCS	Manufacturer Certificate
179	DN50 FLANGE, FL FF SO (BW), DIN PN16; carbon steel	16	PCS	Manufacturer Certificate
180	DN50 FLANGE, FL FF SO (BW), DIN PN10; carbon steel	2	PCS	Manufacturer Certificate
181	DN50 FLANGE, FL FF SO (BW), DIN PN6; carbon steel	68	PCS	Manufacturer Certificate
182	DN40 FLANGE, FL FF SO (BW), JIS 5K; carbon steel	44	PCS	Manufacturer Certificate
183	DN32 FLANGE, FL FF SO (BW), JIS 5K; carbon steel	36	PCS	Manufacturer Certificate
184	DN32 FLANGE, FL FF SO (BW), DIN PN6; carbon steel	2	PCS	Manufacturer Certificate

Sl. No.	Description	Quantity (2 ships)	Unit	Class/ Certificate
185	DN15 FLANGE, FL FF SO (BW), JIS 5K; carbon steel	2	PCS	Manufacturer Certificate
186	DN125 FLANGE BLD FF (BW), JIS 5K; carbon steel	2	PCS	Manufacturer Certificate
187	DN100 FLANGE BLD FF (BW), JIS 5K; carbon steel	2 6	PCS	Manufacturer Certificate
188	DN80 FLANGE BLD FF (BW), JIS 5K; carbon steel	3 4	PCS	Manufacturer Certificate
189	DN65 FLANGE BLD FF (BW), JIS 5K; carbon steel	8	PCS	Manufacturer Certificate
190	DN50 FLANGE BLD FF (BW), JIS 5K; carbon steel	2	PCS	Manufacturer Certificate
191	DN250 STUD RING, M.S; Flange Size OD400 * ID274.5 * thk.32mm), black, with washer and M20*70mm bolts and nuts.	4	PCS	Manufacturer Certificate
192	DN 80 FIRE I.S.C	2	PCS	Manufacturer Certificate
193	DN50 SEWAGE I.S.C	2	PCS	Manufacturer Certificate
194	Bilge, Ballast & Fire Main, DN-40 Flange, Black, ASTM GRADE-106 B, JIS/DIN, PN10	40	PCS	Manufacturer Certificate
195	Oily Bilge System, DN-40 Flange, Black, ASTM GRADE 106 B, JIS/DIN, PN10	80	PCS	Manufacturer Certificate
196	Oily Bilge System, DN-32 Flange, Black, ASTM GRADE 106 B, JIS/DIN, PN10	56	PCS	Manufacturer Certificate
197	Lub Oil System, DN-15 Flange, Black, ASTM GRADE- 106 B, JIS/DIN, PN10	40	PCS	Manufacturer Certificate
198	DN450 90 DEG ELBOW (BW), SCH10, CS, BLACK.	4	PCS	Manufacturer Certificate
199	DN350 90 DEG ELBOW (BW), SCH40, CS, BLACK.	16	PCS	Manufacturer Certificate
200	DN250 90 DEG ELBOW (BW), SCH80, CS, BLACK	2	PCS	BV
201	DN250 90 DEG ELBOW (BW), SCH40, CS, BLACK.	2	PCS	Manufacturer Certificate
202	DN200 90 DEG ELBOW (BW), SCH40, CS, BLACK.	8	PCS	Manufacturer Certificate
203	DN150 90 DEG ELBOW (BW), SCH80, CS, BLACK.	8	PCS	Manufacturer Certificate
204	DN150 90 DEG ELBOW (BW), SCH80, CS, BLACK	8	PCS	BV
205	DN150 90 DEG ELBOW (BW), SCH80, CS, BLACK.	4	PCS	Manufacturer Certificate
206	DN150 90 DEG ELBOW (BW), SCH40, CS, BLACK.	24	PCS	Manufacturer Certificate
207	DN150 90 DEG ELBOW (BW), SCH40, CS, BLACK.	10	PCS	Manufacturer Certificate
208	DN125 90 DEG ELBOW (BW), SCH80, CS, BLACK.	10	PCS	Manufacturer Certificate
209	DN125 90 DEG ELBOW (BW), SCH80, CS, BLACK.	16	PCS	Manufacturer Certificate
210	DN125 90 DEG ELBOW (BW), SCH40, CS, BLACK.	4	PCS	Manufacturer Certificate
211	DN125 90 DEG ELBOW (BW), SCH40, CS, BLACK.	8	PCS	Manufacturer Certificate

Sl. No.	Description	Quantity (2 ships)	Unit	Class/ Certificate
212	DN100 90 DEG ELBOW (BW), SCH80, CS, BLACK.	108	PCS	Manufacturer Certificate
213	DN100 90 DEG ELBOW (BW), SCH80, CS, BLACK	20	PCS	BV
214	DN100 90 DEG ELBOW (BW), SCH80, CS, BLACK.	122	PCS	Manufacturer Certificate
215	DN100 90 DEG ELBOW (BW), SCH40, CS, BLACK.	24	PCS	Manufacturer Certificate
216	DN100 90 DEG ELBOW (BW), SCH40, CS, BLACK.	4	PCS	Manufacturer Certificate
217	DN80 90 DEG ELBOW (BW), SCH160, CS, BLACK	2	PCS	BV
218	DN80 90 DEG ELBOW (BW), SCH80, CS, BLACK.	158	PCS	Manufacturer Certificate
219	DN80 90 DEG ELBOW (BW), SCH80, CS, BLACK.	48	PCS	Manufacturer Certificate
220	DN80 90 DEG ELBOW (BW), SCH40, CS, BLACK.	272	PCS	Manufacturer Certificate
221	DN80 90 DEG ELBOW (BW), SCH40, CS, BLACK.	2	PCS	Manufacturer Certificate
222	DN65 90 DEG ELBOW (BW), SCH80, CS, BLACK.	236	PCS	Manufacturer Certificate
223	DN65 90 DEG ELBOW (BW), SCH80, CS, BLACK	8	PCS	BV
224	DN65 90 DEG ELBOW (BW), SCH80, CS, BLACK.	464	PCS	Manufacturer Certificate
225	DN65 90 DEG ELBOW (BW), SCH40, CS, BLACK.	124	PCS	Manufacturer Certificate
226	DN65 90 DEG ELBOW (BW), SCH40, CS, BLACK.	56	PCS	Manufacturer Certificate
227	DN50 90 DEG ELBOW (BW), SCH80, CS, BLACK.	128	PCS	Manufacturer Certificate
228	DN50 90 DEG ELBOW (BW), SCH80, CS, BLACK.	138	PCS	Manufacturer Certificate
229	DN50 90 DEG ELBOW (BW), SCH40, CS, BLACK.	86	PCS	Manufacturer Certificate
230	DN50 90 DEG ELBOW (BW), SCH40, CS, BLACK.	40	PCS	Manufacturer Certificate
231	DN40 90 DEG ELBOW (BW), SCH80, CS, BLACK.	2	PCS	Manufacturer Certificate
232	DN450 90 DEG ELBOW SR (BW), SCH10, CS, BLACK.	2	PCS	Manufacturer Certificate
233	DN350 90 DEG ELBOW SR (BW), SCH40, CS, BLACK.	4	PCS	Manufacturer Certificate
234	DN150 90 DEG ELBOW SR (BW), SCH80, CS, BLACK.	4	PCS	Manufacturer Certificate
235	DN125 90 DEG ELBOW SR (BW), SCH80, CS, BLACK.	4	PCS	Manufacturer Certificate
236	DN80 90 DEG ELBOW SR (BW), SCH40, CS, BLACK.	2	PCS	Manufacturer Certificate
237	DN65 90 DEG ELBOW SR (BW), SCH80, CS, BLACK.	14	PCS	Manufacturer Certificate
238	DN65 90 DEG ELBOW SR (BW), SCH80, CS, BLACK.	14	PCS	Manufacturer Certificate
239	DN65 90 DEG ELBOW SR (BW), SCH40, CS, BLACK.	4	PCS	Manufacturer Certificate

Sl. No.	Description	Quantity (2 ships)	Unit	Class/ Certificate
240	DN50 90 DEG ELBOW SR (BW), SCH80, CS, BLACK.	4	PCS	Manufacturer Certificate
241	DN450 45 DEG ELBOW (BW), SCH10, CS, BLACK.	8	PCS	Manufacturer Certificate
242	DN350 45 DEG ELBOW (BW), SCH40, CS, BLACK.	8	PCS	Manufacturer Certificate
243	DN150 45 DEG ELBOW (BW), SCH40, CS, BLACK.	10	PCS	Manufacturer Certificate
244	DN150 45 DEG ELBOW (BW), SCH40, CS, BLACK.	4	PCS	Manufacturer Certificate
245	DN125 45 DEG ELBOW (BW), SCH80, CS, BLACK.	6	PCS	Manufacturer Certificate
246	DN125 45 DEG ELBOW (BW), SCH80, CS, BLACK.	6	PCS	Manufacturer Certificate
247	DN125 45 DEG ELBOW (BW), SCH40, CS, BLACK.	4	PCS	Manufacturer Certificate
248	DN125 45 DEG ELBOW (BW), SCH40, CS, BLACK.	12	PCS	Manufacturer Certificate
249	DN100 45 DEG ELBOW (BW), SCH80, CS, BLACK.	74	PCS	Manufacturer Certificate
250	DN100 45 DEG ELBOW (BW), SCH80, CS, BLACK.	52	PCS	Manufacturer Certificate
251	DN100 45 DEG ELBOW (BW), SCH40, CS, BLACK.	6	PCS	Manufacturer Certificate
252	DN100 45 DEG ELBOW (BW), SCH40, CS, BLACK.	10	PCS	Manufacturer Certificate
253	DN80 45 DEG ELBOW (BW), SCH80, CS, BLACK.	76	PCS	Manufacturer Certificate
254	DN80 45 DEG ELBOW (BW), SCH80, CS, BLACK.	8	PCS	Manufacturer Certificate
255	DN80 45 DEG ELBOW (BW), SCH40, CS, BLACK.	102	PCS	Manufacturer Certificate
256	DN80 45 DEG ELBOW (BW), SCH40, CS, BLACK.	6	PCS	Manufacturer Certificate
257	DN65 45 DEG ELBOW (BW), SCH80, CS, BLACK.	38	PCS	Manufacturer Certificate
258	DN65 45 DEG ELBOW (BW), SCH80, CS, BLACK.	170	PCS	Manufacturer Certificate
259	DN65 45 DEG ELBOW (BW), SCH40, CS, BLACK.	84	PCS	Manufacturer Certificate
260	DN65 45 DEG ELBOW (BW), SCH40, CS, BLACK.	12	PCS	Manufacturer Certificate
261	DN50 45 DEG ELBOW (BW), SCH80, CS, BLACK.	24	PCS	Manufacturer Certificate
262	DN50 45 DEG ELBOW (BW), SCH80, CS, BLACK.	24	PCS	Manufacturer Certificate
263	DN50 45 DEG ELBOW (BW), SCH40, CS, BLACK.	26	PCS	Manufacturer Certificate
264	DN50 45 DEG ELBOW (BW), SCH40, CS, BLACK.	14	PCS	Manufacturer Certificate
265	Bilge, Ballast & Fire Main, DN-40 Elbow, 90° Long Radius, PN10; 48.3 X 5, Black, ASTM GRADE-106 B	24	PCS	Manufacturer Certificate
266	Oily Bilge System, DN-40 Elbow, 90° Long Radius, PN10; 48.3 X 3.7, Black, ASTM GRADE-106 B	70	PCS	Manufacturer Certificate

Sl. No.	Description	Quantity (2 ships)	Unit	Class/ Certificate
267	Oily Bilge System, DN-32 Elbow, 90° Long Radius, PN10; 42.2 X 3.5, Black, ASTM GRADE-106 B	40	PCS	Manufacturer Certificate
268	Oily Bilge System, DN-25 Elbow, 90° Long Radius, PN10; 33.4 X 3.3, Black, ASTM GRADE-106 B	30	PCS	Manufacturer Certificate
269	Oily Bilge System, DN-20 Elbow, 90° Long Radius, PN10; 26.7 X 2.8, Black, ASTM GRADE-106 B	10	PCS	Manufacturer Certificate
270	Lub Oil System, DN-40 Elbow, 90° Long Radius, PN10; 48.3 X 5, Black, ASTM GRADE-106 B	80	PCS	Manufacturer Certificate
271	Lub Oil System, DN-32 Elbow, 90° Long Radius, PN10; 42.2 X 4.8, Black, ASTM GRADE-106 B	12	PCS	Manufacturer Certificate
272	Lub Oil System, DN-15 Elbow, 90° Long Radius, PN10; 21.3 X 3.7, Black, ASTM GRADE-106 B	32	PCS	Manufacturer Certificate
273	FO Service & OF System, DN-40 Elbow, 90° Long Radius, PN10; 48.3 X 5, Black, ASTM GRADE-106 B	4	PCS	Manufacturer Certificate
274	FO Service & OF System, DN-32 Elbow, 90° Long Radius, PN10; 42.2 X 4.8, Black, ASTM GRADE-106 B	20	PCS	Manufacturer Certificate
275	FO Service & OF System, DN-25 Elbow, 90° Long Radius, PN10; 33.4 X 4.5, Black, ASTM GRADE-106 B	48	PCS	Manufacturer Certificate
276	FO Service & OF System, DN-20 Elbow, 90° Long Radius, PN10; 26.7 X 3.9, Black, ASTM GRADE-106 B	30	PCS	Manufacturer Certificate
277	FO Service & OF System, DN-15 Elbow, 90° Long Radius, PN10; 21.3 X 3.7, Black, ASTM GRADE-106 B	40	PCS	Manufacturer Certificate
278	FO Transfer System, DN-25 Elbow, 90° Long Radius, PN10; 33.4 X 4.5, Black, ASTM GRADE-106 B	12	PCS	Manufacturer Certificate
279	FO Transfer System, DN-15 Elbow, 90° Long Radius, PN10; 21.3 X 3.7, Black, ASTM GRADE-106 B	80	PCS	Manufacturer Certificate
280	Domestic FW/HW/SW System, DN-32 Elbow, 90° Long Radius, PN10; 42.2 X 4.8, Black, ASTM GRADE-106 B	120	PCS	Manufacturer Certificate
281	Domestic FW/HW/SW System, DN-25 Elbow, 90° Long Radius, PN10; 33.4 X 4.5, Black, ASTM GRADE-106 B	120	PCS	Manufacturer Certificate
282	Domestic FW/HW/SW System, DN-15 Elbow, 90° Long Radius, PN10; 21.3 X 3.7, Black, ASTM GRADE-106 B	20	PCS	Manufacturer Certificate
283	Domestic Black/Grey water System, DN-40 Elbow, 90° Long Radius, PN10; 48.3 X 5, Black, ASTM GRADE- 106 B	120	PCS	Manufacturer Certificate
284	Domestic Black/Grey water System, DN-32 Elbow, 90° Long Radius, PN10; 42.2 X 4.8, Black, ASTM GRADE- 106 B	130	PCS	Manufacturer Certificate
285	Compressed Air System, DN-40 Elbow, 90° Long Radius, PN10; 48.3 X 3.68, Black, ASTM GRADE-106 B	40	PCS	Manufacturer Certificate

Sl. No.	Description	Quantity (2 ships)	Unit	Class/ Certificate
286	Compressed Air System, DN-25 Elbow, 90° Long Radius, PN10; 33.4 X 3.38, Black, ASTM GRADE-106 B	80	PCS	Manufacturer Certificate
287	Compressed Air System, DN-15 Elbow, 90° Long Radius, PN10; 21.3 X 3.7, Black, ASTM GRADE-106 B	80	PCS	Manufacturer Certificate
288	M/E Central Cooling, DN-40 Elbow, 90° Long Radius, PN10; 48.3 X 3.68, Black, ASTM GRADE-106 B	20	PCS	Manufacturer Certificate
289	M/E Central Cooling, DN-32 Elbow, 90° Long Radius, PN10; 42.2 X 4.8, Black, ASTM GRADE-106 B	24	PCS	Manufacturer Certificate
290	M/E Central Cooling, DN-20 Elbow, 90° Long Radius, PN10; 26.7 X 2.8, Black, ASTM GRADE-106 B	20	PCS	Manufacturer Certificate
291	M/E Central Cooling, DN-15 Elbow, 90° Long Radius, PN10; 21.3 X 2.7, Black, ASTM GRADE-106 B	20	PCS	Manufacturer Certificate
292	Auxialiary Central Cooling, DN-40 Elbow, 90° Long Radius, PN10; 48.3 X 5, Black, ASTM GRADE-106 B	20	PCS	Manufacturer Certificate
293	500-350 CONC. REDUCER (BW), SCH80, CS, BLACK	4	PCS	BV
294	350-250 CONC. REDUCER (BW), SCH40, CS, BLACK.	4	PCS	Manufacturer Certificate
295	350-200 CONC. REDUCER (BW), SCH40, CS, BLACK.	4	PCS	Manufacturer Certificate
296	250-150 CONC. REDUCER (BW), SCH40, CS, BLACK.	4	PCS	Manufacturer Certificate
297	150-125 CONC. REDUCER (BW), SCH40, CS, BLACK.	8	PCS	Manufacturer Certificate
298	150-100 CONC. REDUCER (BW), SCH80, CS, BLACK	12	PCS	BV
299	150-100 CONC. REDUCER (BW), SCH40, CS, BLACK.	2	PCS	Manufacturer Certificate
300	125-100 CONC. REDUCER (BW), SCH40, CS, BLACK.	2	PCS	Manufacturer Certificate
301	125-100 CONC. REDUCER (BW), SCH40, CS, BLACK.	12	PCS	Manufacturer Certificate
302	125-80 CONC. REDUCER (BW), SCH160, CS, BLACK	2	PCS	BV
303	125-80 CONC. REDUCER (BW), SCH80, CS, BLACK.	6	PCS	Manufacturer Certificate
304	125-80 CONC. REDUCER (BW), SCH40, CS, BLACK.	16	PCS	Manufacturer Certificate
305	100-80 CONC. REDUCER (BW), SCH80, CS, BLACK.	10	PCS	Manufacturer Certificate
306	100-80 CONC. REDUCER (BW), SCH80, CS, BLACK.	4	PCS	Manufacturer Certificate
307	100-80 CONC. REDUCER (BW), SCH40, CS, BLACK.	10	PCS	Manufacturer Certificate
308	100-80 CONC. REDUCER (BW), SCH40, CS, BLACK.	6	PCS	Manufacturer Certificate
309	100-65 CONC. REDUCER (BW), SCH80, CS, BLACK.	8	PCS	Manufacturer Certificate

Sl. No.	Description	Quantity (2 ships)	Unit	Class/ Certificate
310	100-65 CONC. REDUCER (BW), SCH80, CS, BLACK.	22	PCS	Manufacturer Certificate
311	100-50 CONC. REDUCER (BW), SCH80, CS, BLACK.	4	PCS	Manufacturer Certificate
312	100-50 CONC. REDUCER (BW), SCH40, CS, BLACK.	4	PCS	Manufacturer Certificate
313	80-65 CONC. REDUCER (BW), SCH80, CS, BLACK.	8	PCS	Manufacturer Certificate
314	80-65 CONC. REDUCER (BW), SCH40, CS, BLACK.	10	PCS	Manufacturer Certificate
315	80-50 CONC. REDUCER (BW), SCH80, CS, BLACK.	20	PCS	Manufacturer Certificate
316	80-50 CONC. REDUCER (BW), SCH40, CS, BLACK.	6	PCS	Manufacturer Certificate
317	80-40 CONC. REDUCER (BW), SCH80, CS, BLACK.	10	PCS	Manufacturer Certificate
318	65-50 CONC. REDUCER (BW), SCH80, CS, BLACK.	4	PCS	Manufacturer Certificate
319	65-50 CONC. REDUCER (BW), SCH40, CS, BLACK.	4	PCS	Manufacturer Certificate
320	65-25 CONC. REDUCER (BW), SCH40, CS, BLACK.	12	PCS	Manufacturer Certificate
321	50-40 CONC. REDUCER (BW), SCH80, CS, BLACK.	6	PCS	Manufacturer Certificate
322	50-32 CONC. REDUCER (BW), SCH80, CS, BLACK.	12	PCS	Manufacturer Certificate
323	50-32 CONC. REDUCER (BW), SCH80, CS, BLACK.	4	PCS	Manufacturer Certificate
324	Oily Bilge System, DN 50 X DN 40 Reducer, SCHD-40; Seamless, Black, ASTM GRADE-106 B, PN10	4	PCS	Manufacturer Certificate
325	Oily Bilge System, DN 50 X DN 32 Reducer, SCHD-40; Seamless, Black, ASTM GRADE-106 B, PN10	4	PCS	Manufacturer Certificate
326	Oily Bilge System, DN 40 X DN 32 Reducer, SCHD-40; Seamless, Black, ASTM GRADE-106 B, PN10	4	PCS	Manufacturer Certificate
327	Oily Bilge System, DN 40 X DN 25 Reducer, SCHD-40; Seamless, Black, ASTM GRADE-106 B, PN10	2	PCS	Manufacturer Certificate
328	Lub Oil System, DN 50 X DN 40 Reducer, SCHD-80; Seamless, Black, ASTM GRADE-106 B, PN10	4	PCS	Manufacturer Certificate
329	Lub Oil System, DN 40 X DN 32 Reducer, SCHD-80; Seamless, Black, ASTM GRADE-106 B, PN10	4	PCS	Manufacturer Certificate
330	FO Service & OF System, DN 50 X DN 32 Reducer, SCHD- 80; Seamless, Black, ASTM GRADE-106 B, PN10	4	PCS	Manufacturer Certificate
331	FO Service & OF System, DN 40 X DN 32 Reducer, SCHD- 80; Seamless, Black, ASTM GRADE-106 B, PN10	4	PCS	Manufacturer Certificate
332	FO Service & OF System, DN 32 X DN 25 Reducer, SCHD- 80; Seamless, Black, ASTM GRADE-106 B, PN10	4	PCS	Manufacturer Certificate
333	FO Service & OF System, DN 20 X DN 15 Reducer, SCHD- 80; Seamless, Black, ASTM GRADE-106 B, PN10	10	PCS	Manufacturer Certificate
334	FO Service & OF System, DN 15 X DN 10 Reducer, SCHD- 80; Seamless, Black, ASTM GRADE-106 B, PN10	10	PCS	Manufacturer Certificate

Sl. No.	Description	Quantity (2 ships)	Unit	Class/ Certificate
335	FO Transfer System, DN 25 X DN 15 Reducer, SCHD- 80; Seamless, Black, ASTM GRADE-106 B, PN10	4	PCS	Manufacturer Certificate
336	Domestic FW/HW/SW System, DN 50 X DN 32 Reducer, SCHD- 80; Seamless, Black, ASTM GRADE-106 B, PN10	8	PCS	Manufacturer Certificate
337	Domestic FW/HW/SW System, DN 32 X DN 25 Reducer, SCHD- 80; Seamless, Black, ASTM GRADE-106 B, PN10	6	PCS	Manufacturer Certificate
338	Domestic FW/HW/SW System, DN 25 X DN 15 Reducer, SCHD- 80; Seamless, Black, ASTM GRADE-106 B, PN10	2	PCS	Manufacturer Certificate
339	Domestic Black/Grey water System, DN 40 X DN 32 Reducer, SCHD- 80; Seamless, Black, ASTM GRADE-106 B, PN10	2	PCS	Manufacturer Certificate
340	Compressed Air System, DN 40 X DN 25 Reducer, SCHD- 40; Seamless, Black, ASTM GRADE-106 B, PN10	10	PCS	Manufacturer Certificate
341	Compressed Air System, DN 40 X DN 15 Reducer, SCHD- 40; Seamless, Black, ASTM GRADE-106 B, PN10	2	PCS	Manufacturer Certificate
342	Compressed Air System, DN 25 X DN 15 Reducer, SCHD- 40; Seamless, Black, ASTM GRADE-106 B, PN10	10	PCS	Manufacturer Certificate
343	Compressed Air System, DN 20 X DN 15 Reducer, SCHD- 40; Seamless, Black, ASTM GRADE-106 B, PN10	10	PCS	Manufacturer Certificate
344	Compressed Air System, DN 15 X DN 10 Reducer, SCHD- 40; Seamless, Black, ASTM GRADE-106 B, PN10	2	PCS	Manufacturer Certificate
345	M/E Central Cooling, DN 32 X DN 25 Reducer, SCHD- 80; Seamless, Black, ASTM GRADE-106 B, PN10	8	PCS	Manufacturer Certificate
346	Auxiliary Central Cooling, DN 40 X DN 32 Reducer, SCHD- 80; Seamless, Black, ASTM GRADE-106 B, PN10	4	PCS	Manufacturer Certificate
347	DN250-DN200 REDUCER, CS, sch80	2	NOS	Manufacturer Certificate
348	Socket, 1/2", Inner thread, 3000# carbon steel	24	PCS	Manufacturer Certificate
349	Socket, 1/4", Inner thread, 3000# carbon steel	12	PCS	Manufacturer Certificate
350	Socket, 1/2", Inner thread, 3000# carbon steel	16	PCS	Manufacturer Certificate
351	Socket, 1/4", Inner thread, 3000# carbon steel	12	PCS	Manufacturer Certificate
352	H-Nipple/Pipe Nipple, 11/4", carbon steel, Outer thread	4	PCS	Manufacturer Certificate
353	H-Nipple/Pipe Nipple, 1", carbon steel, Outer thread	60	PCS	Manufacturer Certificate
354	H-Nipple/Pipe Nipple, 1/2", carbon steel, Outer thread	12	PCS	Manufacturer Certificate

Sl. No.	Description	Quantity (2 ships)	Unit	Class/ Certificate
355	Oily Bilge System, DN 25 X DN 25 X DN 25 Tee, SCHD- 40; Seamless, Black, ASTM GRADE-106 B, PN10	4	PCS	Manufacturer Certificate
356	Oily Bilge System, DN 32 X DN 32 X DN 32 Tee, SCHD- 40; Seamless, Black, ASTM GRADE-106 B, PN10	2	PCS	Manufacturer Certificate
357	Lub Oil System, DN 65 X DN 40 X DN 65 Tee, SCHD- 80; Seamless, Black, ASTM GRADE-106 B, PN10	4	PCS	Manufacturer Certificate
358	Lub Oil System, DN 40 X DN 40 X DN 40 Tee, SCHD- 80; Seamless, Black, ASTM GRADE-106 B, PN10	6	PCS	Manufacturer Certificate
359	Lub Oil System, DN 15 X DN 15 X DN 15 Tee, SCHD- 80; Seamless, Black, ASTM GRADE-106 B, PN10	6	PCS	Manufacturer Certificate
360	FO Service & OF System, DN 50 X DN 32 X DN 50 Tee, SCHD- 80; Seamless, Black, ASTM GRADE-106 B, PN10	4	PCS	Manufacturer Certificate
361	FO Service & OF System, DN 50 X DN 20 X DN 50 Tee, SCHD- 80; Seamless, Black, ASTM GRADE-106 B, PN10	2	PCS	Manufacturer Certificate
362	FO Service & OF System, DN 25 X DN 20 X DN 25 Tee, SCHD- 80; Seamless, Black, ASTM GRADE-106 B, PN10	2	PCS	Manufacturer Certificate
363	FO Service & OF System, DN 25 X DN 15 X DN 25 Tee, SCHD- 80; Seamless, Black, ASTM GRADE-106 B, PN10	4	PCS	Manufacturer Certificate
364	FO Service & OF System, DN 25 X DN 25 X DN 25 Tee, SCHD- 80; Seamless, Black, ASTM GRADE-106 B, PN10	12	PCS	Manufacturer Certificate
365	FO Service & OF System, DN 20 X DN 20 X DN 20 Tee, SCHD- 80; Seamless, Black, ASTM GRADE-106 B, PN10	4	PCS	Manufacturer Certificate
366	FO Service & OF System, DN 20 X DN 15 X DN 20 Tee, SCHD- 80; Seamless, Black, ASTM GRADE-106 B, PN10	2	PCS	Manufacturer Certificate
367	FO Service & OF System, DN 15 X DN 15 X DN 15 Tee, SCHD- 80; Seamless, Black, ASTM GRADE-106 B, PN10	4	PCS	Manufacturer Certificate
368	FO Transfer System, DN 25 X DN 15 X DN 25 Tee, SCHD- 80; Seamless, Black, ASTM GRADE-106 B, PN10	2	PCS	Manufacturer Certificate
369	FO Transfer System, DN 15 X DN 15 X DN 15 Tee, SCHD- 80; Seamless, Black, ASTM GRADE-106 B, PN10	10	PCS	Manufacturer Certificate
370	Domestic FW/HW/SW System, DN 32 X DN 32 X DN 32 Tee, SCHD- 80; Seamless, Black, ASTM GRADE-106 B, PN10	2	PCS	Manufacturer Certificate
371	Domestic FW/HW/SW System, DN 32 X DN 25 X DN 32 Tee, SCHD- 80; Seamless, Black, ASTM GRADE-106 B, PN10	2	PCS	Manufacturer Certificate
372	Domestic FW/HW/SW System, DN 25 X DN 15 X DN 25 Tee, SCHD- 80; Seamless, Black, ASTM GRADE-106 B, PN10	2	PCS	Manufacturer Certificate

Sl. No.	Description	Quantity (2 ships)	Unit	Class/ Certificate
373	Domestic FW/HW/SW System, DN 15 X DN 15 X DN 15 Tee, SCHD- 80; Seamless, Black, ASTM GRADE-106 B, PN10	2	PCS	Manufacturer Certificate
374	Domestic Black/Grey water System, DN 50 X DN 40 X DN 50 Tee, SCHD- 80; Seamless, Black, ASTM GRADE- 106 B, PN10	2	PCS	Manufacturer Certificate
375	Domestic Black/Grey water System, DN 40 X DN 40 X DN 40 Tee, SCHD- 80; Seamless, Black, ASTM GRADE- 106 B, PN10	2	PCS	Manufacturer Certificate
376	Compressed Air System, DN 40 X DN 40 X DN 40 Tee, SCHD- 40; Seamless, Black, ASTM GRADE-106 B, PN10	6	PCS	Manufacturer Certificate
377	Compressed Air System, DN 40 X DN 25 X DN 40 Tee, SCHD- 40; Seamless, Black, ASTM GRADE-106 B, PN10	6	PCS	Manufacturer Certificate
378	Compressed Air System, DN 40 X DN 15 X DN 40 Tee, SCHD- 40; Seamless, Black, ASTM GRADE-106 B, PN10	8	PCS	Manufacturer Certificate
379	Compressed Air System, DN 25 X DN 15 X DN 25 Tee, SCHD- 40; Seamless, Black, ASTM GRADE-106 B, PN10	8	PCS	Manufacturer Certificate
380	Compressed Air System, DN 25 X DN 25 X DN 25 Tee, SCHD- 40; Seamless, Black, ASTM GRADE-106 B, PN10	2	PCS	Manufacturer Certificate
381	M/E Central Cooling, DN 80 X DN 40 X DN 80 Tee, SCHD- 40; Seamless, Black, ASTM GRADE-106 B, PN10	4	PCS	Manufacturer Certificate
382	M/E Central Cooling, DN 80 X DN 32 X DN 80 Tee, SCHD- 80; Seamless, Black, ASTM GRADE-106 B, PN10	4	PCS	Manufacturer Certificate
383	M/E Central Cooling, DN 50 X DN 32 X DN 50 Tee, SCHD- 80; Seamless, Black, ASTM GRADE-106 B, PN10	4	PCS	Manufacturer Certificate
384	M/E Central Cooling, DN 15 X DN 15 X DN 15 Tee, SCHD- 40; Seamless, Black, ASTM GRADE-106 B, PN10	4	PCS	Manufacturer Certificate
385	DN 150 OIL SPILL BOX FLG, STEEL; steel plate thickness 10mm	2	PCS	Manufacturer Certificate
386	DN 125 OIL SPILL BOX FLG, STEEL; steel plate thickness 10mm	2	PCS	Manufacturer Certificate
387	DN100 OIL SPILL BOX FLG, STEEL; steel plate thickness 10mm	2	PCS	Manufacturer Certificate
388	DN 80 OIL SPILL BOX FLG, STEEL; steel plate thickness 10mm	2	PCS	Manufacturer Certificate
389	DN 65 OIL SPILL BOX FLG, STEEL; steel plate thickness 10mm	10	PCS	Manufacturer Certificate
390	DN100 EXPANSION JOINT, ANSI 150; carbon steel flange, SS304 Bellow	4	PCS	Manufacturer Certificate
391	DN80 EXPANSION JOINT, ANSI 150; carbon steel flange, SS304 Bellow	2	PCS	Manufacturer Certificate
392	DN350 FLEXIBLE JOINT, DIN PN16; L=265mm, material carbon steel + EPDM rubber	4	PCS	Manufacturer Certificate
393	DN 65 GOOSENECK COVER, CS	12	PCS	Manufacturer Certificate
394	DN 50 GOOSENECK COVER, CS	14	PCS	Manufacturer Certificate

Sl. No.	Description	Quantity (2 ships)	Unit	Class/ Certificate
395	DN50 INTERNAL DRAIN SCUPPER, MS	8	PCS	Manufacturer Certificate
396	DN450 RAINSHIELD, CS	4	PCS	Manufacturer Certificate
397	DN125 RAINSHIELD, CS	4	PCS	Manufacturer Certificate
398	DN100 RAINSHIELD, CS	2	PCS	Manufacturer Certificate
399	DN80 SCUPPER_GRATING_EXT., MS	6	PCS	Manufacturer Certificate
400	DN 125 OVERFLOW CYLINDER TANK, 10mm thickness steel	2	PCS	Manufacturer Certificate
401	DN 65 OVERFLOW CYLINDER TANK, 10mm thickness steel	8	PCS	Manufacturer Certificate
402	Dia.20mm round bar, carbon steel, 6m/piece	126	meter	Manufacturer Certificate
403	Dia.20mm round bar, carbon steel, 6m/piece	228	meter	Manufacturer Certificate
404	DN80, 90 DEG ELBOW (BW), SCH40, CuNi 90/10	42	PCS	Manufacturer Certificate
405	DN65, 90 DEG ELBOW (BW), SCH40, CuNi 90/10	30	PCS	Manufacturer Certificate
406	DN50, 90 DEG ELBOW (BW), SCH40, CuNi 90/10	8	PCS	Manufacturer Certificate
407	DN80, 90 DEG ELBOW SR (BW), SCH40, CuNi 90/10	2	PCS	Manufacturer Certificate
408	DN80, 45 DEG ELBOW (BW), SCH40, CuNi 90/10	20	PCS	Manufacturer Certificate
409	DN65, 45 DEG ELBOW (BW), SCH40, CuNi 90/10	14	PCS	Manufacturer Certificate
410	DN50, 45 DEG ELBOW (BW), SCH40, CuNi 90/10	2	PCS	Manufacturer Certificate
411	80-65, CONC. REDUCER (BW), SCH40, CuNi 90/10	14	PCS	Manufacturer Certificate
412	80-50, CONC. REDUCER (BW), SCH40, CuNi 90/10	2	PCS	Manufacturer Certificate
413	80-40, CONC. REDUCER (BW), SCH40, CuNi 90/10	2	PCS	Manufacturer Certificate
414	65-50, CONC. REDUCER (BW), SCH40, CuNi 90/10	4	PCS	Manufacturer Certificate
415	DN80, FLANGE, FL FF SO (BW), JIS 5K, CuNi 90/10	146	PCS	Manufacturer Certificate
416	DN65, FLANGE, FL FF SO (BW), JIS 5K, CuNi 90/10	36	PCS	Manufacturer Certificate
417	DN50, FLANGE, FL FF SO (BW), JIS 5K, CuNi 90/10	26	PCS	Manufacturer Certificate
418	DN40, FLANGE, FL FF SO (BW), JIS 5K, CuNi 90/10	4	PCS	Manufacturer Certificate
419	DN250 STRAINER 250A, JIS 5K, CI	4	PCS	Manufacturer Certificate
420	DN80 STRAINER FLG, JIS 5K, CI	2	PCS	Manufacturer Certificate
421	DN65 STRAINER FLG, JIS 5K, CAST STEEL	4	PCS	Manufacturer Certificate

Sl. No.	Description	Quantity (2 ships)	Unit	Class/ Certificate
422	DN80 JIS WATER STRAINER, JIS 5K, CI	6	PCS	Manufacturer Certificate
423	DN65 SIMPLEX OIL STRAINER, JIS 5K, CI	4	PCS	Manufacturer Certificate
424	DN80 EDUCTOR, Inlet-DN50, Suction/Discharge- DN80, JIS 5K, BRONZE	2	PCS	Manufacturer Certificate
425	DN100 SIGHT GLASS, JIS 5K, CI	2	PCS	Manufacturer Certificate
426	DN100 FLOW METER, JIS 5K; Oval geared flowmeter LC-A100JIS5K.2/BELZ, DN100mm, DC24V, output 4-20mA, with RS485 communication, LCD display of instantaneous flow rate and cumulative total amount; Material: cast iron, flange connection; Flow range: 15-100m3/h, accuracy: 0.5%, temperature resistance -20~60 °C, pressure resistance: 1.6Mpa, JIS 5K standard flange	2	PCS	Manufacturer Certificate
427	DN50 FLOW METER, JIS 5K; Oval geared flowmeter LC-A50JIS5K.2/BELZ, DN50mm, DC24V, output 4-20mA, with RS485 communication, LCD display of instantaneous flow rate and cumulative total amount; Material: cast iron, flange connection; Flow range: 4-24m3/h, accuracy: 0.5%, temperature resistance -20~60 °C, pressure resistance: 1.6Mpa, JIS 5K standard flange	2	PCS	Manufacturer Certificate
428	DN80 FW. AIR SEPARATOR, CS	4	PCS	Manufacturer Certificate
429	DN80 MUD BOX (L TYPE), JIS 5K, CI	2	PCS	Manufacturer Certificate
430	DN65 MUD BOX (L TYPE), JIS 5K, CI	10	PCS	Manufacturer Certificate
431	DN65 ROSE BOX, JIS, carbon steel	4	PCS	Manufacturer Certificate
432	DN 150 AIR VENT HEAD, JIS 5K, CI, FLAME SCR.	2	PCS	Manufacturer Certificate
433	DN 125 AIR VENT HEAD, JIS 5K, CI, FLAME SCR.	2	PCS	Manufacturer Certificate
434	DN 100 AIR VENT HEAD, JIS 5K, CI, INSECT SCR.	16	PCS	Manufacturer Certificate
435	DN 80 AIR VENT HEAD, JIS 5K, CI, FLAME SCR.	2	PCS	Manufacturer Certificate
436	DN 65 AIR VENT HEAD, JIS 5K, CI, FLAME SCR.	14	PCS	Manufacturer Certificate
437	DN 50 AIR VENT HEAD, JIS 5K, CI, INSECT SCR.	10	PCS	Manufacturer Certificate
438	Gauge Cock, 1/4" DN6, Male-Female	12	PCS	Manufacturer Certificate
439	Gauge Cock, 1/2" DN15, Male-Female	44	PCS	Manufacturer Certificate
440	Pipe 38 X 5, HP, material E355(St. 52.4), EN10305-4(DIN2445/2), 338 bar	156	MTR	Manufacturer Certificate
441	Pipe 30 X 4, HP, material E355(St. 52.4), EN10305-4(DIN2445/2), 342 bar	48	MTR	Manufacturer Certificate

Sl. No.	Description	Quantity (2 ships)	Unit	Class/ Certificate
442	Pipe 25 X 3, HP, material E355(St. 52.4), EN10305-4(DIN2445/2), 308 bar	72	MTR	Manufacturer Certificate
443	Pipe 12 X 2, HP, material E355(St. 52.4), EN10305-4(DIN2445/2), 428 bar	216	MTR	Manufacturer Certificate
444	Pipe 35 X 3, LP, material E235(St. 37.4), EN10305-4(DIN2445/2), 220 bar	12	MTR	Manufacturer Certificate
445	Pipe 28 X 2, LP, material E235(St. 37.4), EN10305-4(DIN2445/2), 183 bar	108	MTR	Manufacturer Certificate
446	Pipe 22 X 2, LP, material E235(St. 37.4), EN10305-4(DIN2445/2), 233 bar	24	MTR	Manufacturer Certificate
447	Pipe 15 X 1.5, LP, material E235(St. 37.4), EN10305-4(DIN2445/2), 257 bar	48	MTR	Manufacturer Certificate
448	Pipe 12 X 1.5, LP, material E235(St. 37.4), EN10305-4(DIN2445/2), 321 bar	48	MTR	Manufacturer Certificate
449	Union Connector 38 mm, HP, 338 bar; 316L, sleeve type union (including screw cap sleeves at both ends)	50	PCS	Manufacturer Certificate
450	Union Connector 30 mm, HP, 342 bar; 316L, sleeve type union (including screw cap sleeves at both ends)	10	PCS	Manufacturer Certificate
451	Union Connector 25 mm, HP, 308 bar; 316L, sleeve type union (including screw cap sleeves at both ends)	24	PCS	Manufacturer Certificate
452	Union Connector 12 mm, HP, 428 bar; 316L, sleeve type union (including screw cap sleeves at both ends)	80	PCS	Manufacturer Certificate
453	Union Connector 35 mm, LP, 220 bar; 45# carbon steel, sleeve type union (including screw cap sleeves at both ends)	6	PCS	Manufacturer Certificate
454	Union Connector 28 mm, LP, 183 bar; 45# carbon steel, sleeve type union (including screw cap sleeves at both ends)	40	PCS	Manufacturer Certificate
455	Union Connector 22 mm, LP, 233 bar; 45# carbon steel, sleeve type union (including screw cap sleeves at both ends)	10	PCS	Manufacturer Certificate
456	Union Connector 15 mm, LP, 257 bar; 45# carbon steel, sleeve type union (including screw cap sleeves at both ends)	20	PCS	Manufacturer Certificate
457	Union Connector 12 mm, LP, 321 bar; 45# carbon steel, sleeve type union (including screw cap sleeves at both ends)	20	PCS	Manufacturer Certificate
458	Male Connector 38 mm X 1.5", HP, 338 bar; 316L, terminal type union (including screw cap sleeves at one end)	8	PCS	Manufacturer Certificate
459	Male Connector 30 mm X 1.25", HP, 342 bar; 316L, terminal type union (including screw cap sleeves at one end)	8	PCS	Manufacturer Certificate
460	Male Connector 25 mm X 1", HP, 308 bar; 316L, terminal type union (including screw cap sleeves at one end)	8	PCS	Manufacturer Certificate
461	Male Connector 12 mm X 3/8", HP, 428 bar; 316L, terminal type union (including screw cap sleeves at one end)	16	PCS	Manufacturer Certificate
462	Male Connector 22 mm X 3/4", LP, 233 bar; 45# carbon steel, terminal type union (including screw cap sleeves at one end); Thread type	8	PCS	Manufacturer Certificate

Sl. No.	Description	Quantity (2 ships)	Unit	Class/ Certificate
463	Reducing Connector 28 mm X 22 mm, LP, 183 bar; 45# carbon steel, sleeve type reducing union (including screw cap sleeves at both ends)	2	PCS	Manufacturer Certificate
464	Reducing Connector 35 mm X 28 mm, LP, 220 bar; 45# carbon steel, sleeve type reducing union (including screw cap sleeves at both ends)	20	PCS	Manufacturer Certificate
465	Tee Connector 28 mm X 12mm X 28mm, LP, 183 bar; 45# carbon steel, sleeve type union tee (including screw cap sleeves at three ends)	6	PCS	Manufacturer Certificate
466	Tee Connector 28 mm X 22mm X 28mm, LP, 183 bar; 45# carbon steel, sleeve type union tee (including screw cap sleeves at three ends)	2	PCS	Manufacturer Certificate
467	Tee Connector 28 mm X 15mm X 28mm, LP, 233 bar; 45# carbon steel, sleeve type union tee (including screw cap sleeves at three ends)	4	PCS	Manufacturer Certificate
468	Oily Bilge System, DN-25 Flange, Black, ASTM GRADE 106 B, JIS/DIN, PN10	60	PCS	Manufacturer Certificate
469	Oily Bilge System, DN-20 Flange, Black, ASTM GRADE 106 B, JIS/DIN, PN10	12	PCS	Manufacturer Certificate
470	Lub Oil System, DN-40 Flange, Black, ASTM GRADE- 106 B, JIS/DIN, PN10	76	PCS	Manufacturer Certificate
471	Lub Oil System, DN-32 Flange, Black, ASTM GRADE- 106 B, JIS/DIN, PN10	20	PCS	Manufacturer Certificate
472	FO Service & OF System, DN-40 Flange, Black, ASTM GRADE-106 B, JIS/DIN, PN10	8	PCS	Manufacturer Certificate
473	FO Service & OF System, DN-32 Flange, Black, ASTM GRADE-106 B, JIS/DIN, PN10	16	PCS	Manufacturer Certificate
474	FO Service & OF System, DN-25 Flange, Black, ASTM GRADE-106 B, JIS/DIN, PN10	60	PCS	Manufacturer Certificate
475	FO Service & OF System, DN-20 Flange, Black, ASTM GRADE-106 B, JIS/DIN, PN10	48	PCS	Manufacturer Certificate
476	FO Service & OF System, DN-15 Flange, Black, ASTM GRADE-106 B, JIS/DIN, PN10	60	PCS	Manufacturer Certificate
477	FO Transfer System, DN-25 Flange, Black, ASTM GRADE-106 B, JIS/DIN, PN10	16	PCS	Manufacturer Certificate
478	FO Transfer System, DN-15 Flange, Black, ASTM GRADE-106 B, JIS/DIN, PN10	40	PCS	Manufacturer Certificate
479	Domestic FW/HW/SW System, DN-32 Flange, Black, ASTM GRADE-106 B, JIS/DIN, PN10	100	PCS	Manufacturer Certificate
480	Domestic FW/HW/SW System, DN-25 Flange, Black, ASTM GRADE-106 B, JIS/DIN, PN10	120	PCS	Manufacturer Certificate
481	Domestic FW/HW/SW System, DN-15 Flange, Black, ASTM GRADE-106 B, JIS/DIN, PN10	20	PCS	Manufacturer Certificate
482	Domestic Black/Grey water System, DN-40 Flange, Black, ASTM GRADE-106 B, JIS/DIN, PN10	60	PCS	Manufacturer Certificate
483	Domestic Black/Grey water System, DN-32 Flange, Black, ASTM GRADE-106 B, JIS/DIN, PN10	24	PCS	Manufacturer Certificate
484	Compressed Air System, DN-40 Flange, Black, ASTM GRADE-106 B, JIS/DIN, PN10	60	PCS	Manufacturer Certificate
485	Compressed Air System, DN-25 Flange, Black, ASTM GRADE-106 B, JIS/DIN, PN10	100	PCS	Manufacturer Certificate
486	Compressed Air System, DN-15 Flange, Black, ASTM GRADE-106 B, JIS/DIN, PN10	124	PCS	Manufacturer Certificate

Sl. No.	Description	Quantity (2 ships)	Unit	Class/ Certificate
487	M/E Central Cooling, DN-40 Flange, Black, ASTM GRADE-106 B, JIS/DIN, PN10	24	PCS	Manufacturer Certificate
488	M/E Central Cooling, DN-32 Flange, Black, ASTM GRADE-106 B, JIS/DIN, PN10	24	PCS	Manufacturer Certificate
489	M/E Central Cooling, DN-20 Flange, Black, ASTM GRADE-106 B, JIS/DIN, PN10	24	PCS	Manufacturer Certificate
490	M/E Central Cooling, DN-15 Flange, Black, ASTM GRADE-106 B, JIS/DIN, PN10	24	PCS	Manufacturer Certificate
491	Auxiliary Central Cooling, DN-40 Flange, Black, ASTM GRADE-106 B, JIS/DIN, PN10	72	PCS	Manufacturer Certificate
492	Hose Pipe, HP, 38mm/1.5 inch, 338 bar, 1meters per piece	4	PCS	Manufacturer Certificate
493	Hose Pipe, HP, 30mm/1.25 inch, 342 bar, 1meters per piece	4	PCS	Manufacturer Certificate
494	Hose Pipe, HP, 25mm/1 inch, 308 bar, 1meters per piece	4	PCS	Manufacturer Certificate
495	Hose Pipe, HP, 12mm/ 3/8 inch, 428 bar, 1meters per piece	8	PCS	Manufacturer Certificate
496	Hose Pipe, LP, 22mm/ 3/4inch, 220 bar	4	PCS	Manufacturer Certificate
497	Hose Pipe, LP, 12mm/ 3/8 inch, 183 bar	4	PCS	Manufacturer Certificate
498	Hydraulic Pipe Clamp, SS, 38 mm, material: Polypropylene + SS304	70	PCS	Manufacturer Certificate
499	Hydraulic Pipe Clamp, SS, 35 mm, material: Polypropylene + SS304	8	PCS	Manufacturer Certificate
500	Hydraulic Pipe Clamp, SS, 30 mm, material: Polypropylene + SS304	12	PCS	Manufacturer Certificate
501	Hydraulic Pipe Clamp, SS, 28 mm, material: Polypropylene + SS304	50	PCS	Manufacturer Certificate
502	Hydraulic Pipe Clamp, SS, 25 mm, material: Polypropylene + SS304	36	PCS	Manufacturer Certificate
503	Hydraulic Pipe Clamp, SS, 22 mm, material: Polypropylene + SS304	12	PCS	Manufacturer Certificate
504	Hydraulic Pipe Clamp, SS, 15 mm, material: Polypropylene + SS304	24	PCS	Manufacturer Certificate
505	Hydraulic Pipe Clamp, SS, 12 mm, material: Polypropylene + SS304	140	PCS	Manufacturer Certificate
506	BOLTS M30 X 100 C/W NUT	48	PCS	Manufacturer Certificate
507	BOLTS M26 X 160 C/W NUT			Manufacturer Certificate
508	BOLTS M26 X 110 C/W NUT	4864	PCS	Manufacturer Certificate
509	BOLTS M24 X 95 C/W NUT	192	PCS	Manufacturer Certificate
510	BOLTS M22 X 220 C/W NUT	32	PCS	Manufacturer Certificate
511	BOLTS M22 X 130 C/W NUT	32	PCS	Manufacturer Certificate
512	BOLTS M22 X 125 C/W NUT	32	PCS	Manufacturer Certificate
513	BOLTS M22 X 75 C/W NUT	64	PCS	Manufacturer Certificate

Sl. No.	Description	Quantity (2 ships)	Unit	Class/ Certificate
514	BOLTS M20 X 155 C/W NUT	64	PCS	Manufacturer Certificate
515	BOLTS M20 X 140 C/W NUT	48	PCS	Manufacturer Certificate
516	BOLTS M20 X 85 C/W NUT	48	PCS	Manufacturer Certificate
517	BOLTS M20 X 80 C/W NUT	144	PCS	Manufacturer Certificate
518	BOLTS M20 X 75 C/W NUT	64	PCS	Manufacturer Certificate
519	BOLTS M20 X 70 C/W NUT	224	PCS	Manufacturer Certificate
520	BOLTS M16 X 125 C/W NUT	32	PCS	Manufacturer Certificate
521	BOLTS M16 X 110 C/W NUT	144	PCS	Manufacturer Certificate
522	BOLTS M16 X 105 C/W NUT	80	PCS	Manufacturer Certificate
523	BOLTS M16 X 100 C/W NUT	16	PCS	Manufacturer Certificate
524	BOLTS M16 X 90 C/W NUT	64	PCS	Manufacturer Certificate
525	BOLTS M16 X 75 C/W NUT	352	PCS	Manufacturer Certificate
526	BOLTS M16 X 65 C/W NUT	32	PCS	Manufacturer Certificate
527	BOLTS M16 X 60 C/W NUT	1752	PCS	Manufacturer Certificate
528	BOLTS M16 X 55 C/W NUT	3068	PCS	Manufacturer Certificate
529	BOLTS M16 X 45 C/W NUT	2944	PCS	Manufacturer Certificate
530	BOLTS M12 X 60 C/W NUT	8	PCS	Manufacturer Certificate
531	BOLTS M12 X 50 C/W NUT	168	PCS	Manufacturer Certificate
532	BOLTS M12 X 45 C/W NUT	6120	PCS	Manufacturer Certificate
533	Nut Bolt, MS, M16 X 65mm, with double washer	1100	PCS	Manufacturer Certificate
534	Nut Bolt, Black, M16 X 65mm, with double washer	700	PCS	Manufacturer Certificate
535	Nut Bolt, Black, M12 X 55mm, with double washer	1400	PCS	Manufacturer Certificate
536	Nut Bolt, MS, M12 X 55mm, with double washer	2700	PCS	Manufacturer Certificate

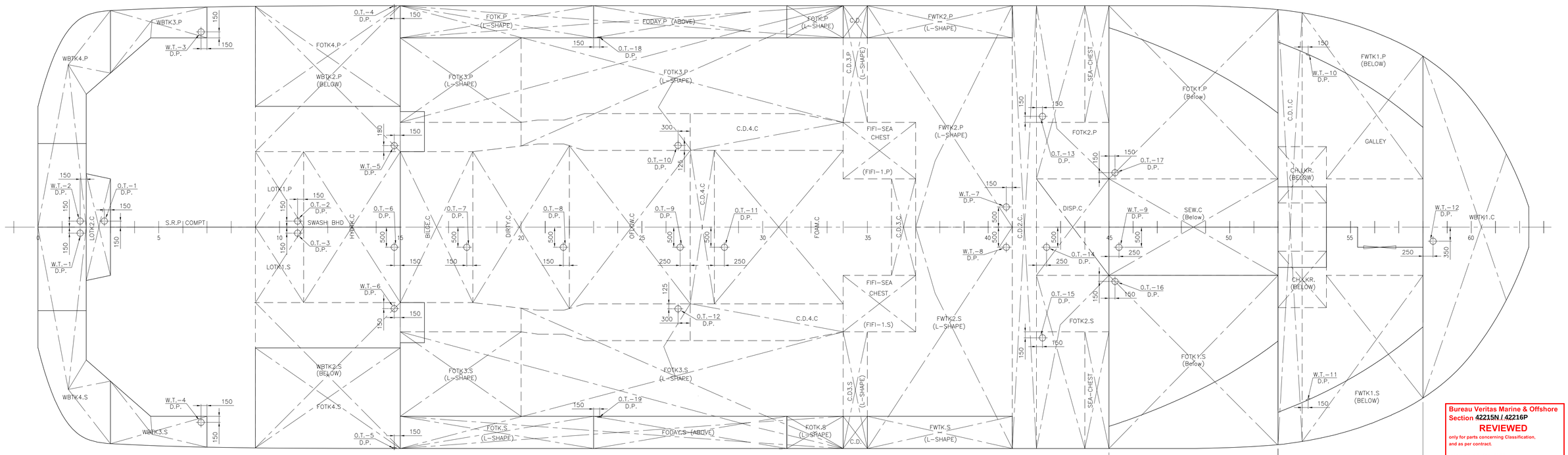

PLAN ON BELOW MAIN DECK

Bureau Veritas Marine & Offshore Section 42215N / 42216P
REVIEWED
only for parts concerning Classification, and as per contract.
Istanbul, 19-Jan-2023
[Electronic document]
The plan approval office

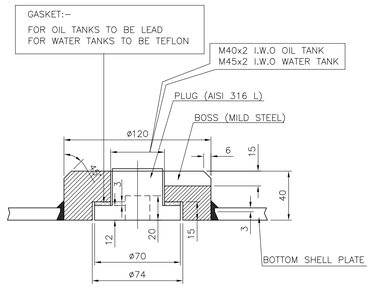

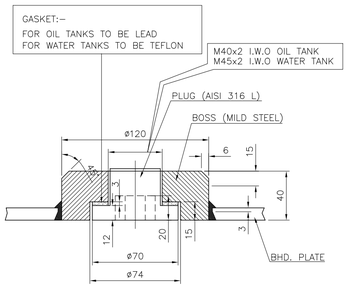

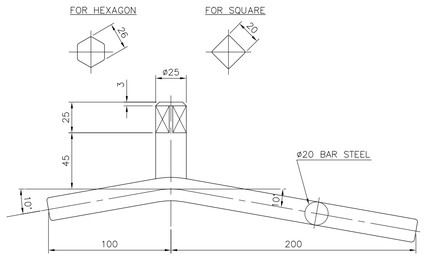

SPANNER
(SCALE-1:2.5)

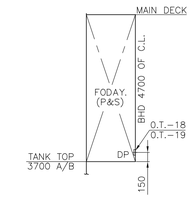

SECTION AT FR. 23+150
(PORT SHOWN STBD MIRROR IMAGE)
(LOOKING FWD.)

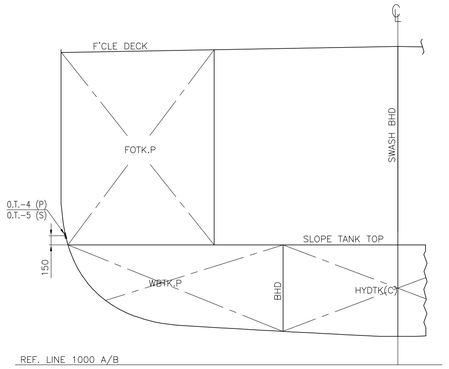

SECTION AT FR.14+450
(PORT SHOWN STBD MIRROR IMAGE)
(LOOKING FWD.)

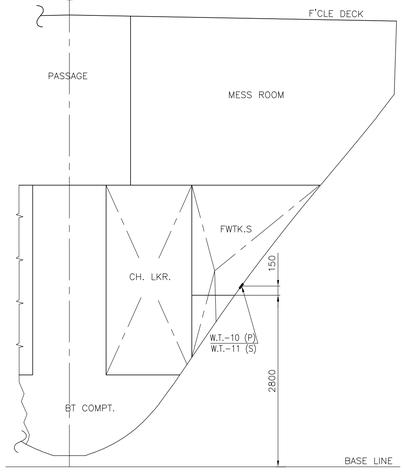

SECTION AT FR.53+150
(PORT SHOWN STBD MIRROR IMAGE)
(LOOKING FWD.)

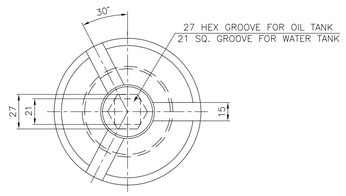

DETAIL OF DRAIN PLUG FOR BOTTOM SHELL
(17 NOS. FOR OIL TANKS)
(12 NOS. FOR WATER TANKS)
(SCALE-1:2.5)

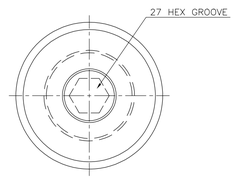

DETAIL OF DRAIN PLUG FOR BHD.
(REQUIRED 4 NOS.)
2 NOS O.T
(SCALE 1 : 2.5)

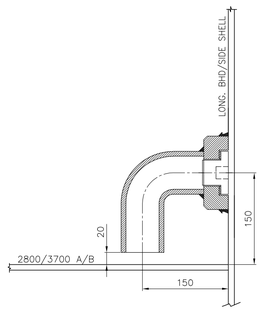

DRAIN PLUG FOR F.O.DAY TANK/F.W.TANK (FWD)
(SCALE 1:5)

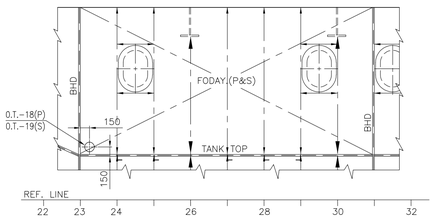

LONG. BHD. 4700 OFF C.L.
(PORT SHOWN STBD MIRROR IMAGE)
(LOOKING OUTBOARD)

REF. DWG :-

1)	DIMENSION PROFILE	–	01/22-D03
2)	CAPACITY PLAN	–	01/22-D04
3)	HULL CONSTRUCTION (BLOCK 1)	–	01/22-H251
4)	HULL CONSTRUCTION (BLOCK 2)	–	01/22-H252
5)	HULL CONSTRUCTION (BLOCK 3)	–	01/22-H253
6)	HULL CONSTRUCTION (BLOCK 5)	–	01/22-H255

NOTE:-

1. WELDING & WATERTIGHTNESS TO SURVEYOR'S SATISFACTION
2. ALL WELDS IN WAY OF DRAIN PLUGS SHOULD BE INSPECTED VISUALLY AND CHECKED WITH A SUITABLE NDE METHOD. SECURING WELD SHOULD BE FITTED.
3. DRAIN PLUGS SHOULD BE KEPT CLEAR OF DOCKING BLOCKS, WELDED SEAMS OR BUTTS, FLAT OF KEEL, SUCTION STRUMS OR ANY OTHER ARRANGEMENTS INSIDE TANKS.
4. TANK NUMBERS, ETC MAY BE WELDED ADJACENT TO EACH PLUG FOR IDENTIFICATION PURPOSE.

REV	DESCRIPTION OF ALTERATION	DATE	BY

REV	DESCRIPTION OF ALTERATION	DATE	BY

1. ALL STEEL MATERIAL ARE BV GRADE-A UNLESS STATED OTHERWISE.
2. YARD IS ADVISED NOT TO FABRICATE UNTIL DWG. IS APPROVED BY CLASS.
3. "HOLD" MARK ON DWG. INDICATES CLASS APPROVAL PENDING.

DRAWN : GOUTAM	SCALE : 1:50	PROJECT : 70T BOLLARD PULL TUG	DESIGNER : NAVNAUTIK PTE LTD NAVAL ARCHITECTS, MARINE ENGINEERS & MARINE SURVEYORS. 540 SIMS AVENUE #02-04 SIMS AVE CENTRE SINGAPORE 387603 TEL: +65 67417220 FAX: +65 67417219 E-mail: NPL@navnautik.com or navnautik@gmail.com
CHECKED : NAV	CLIENT'S HULL NO. : NB786 & NB787	TITLE : DRAIN PLUG DISPOSITION & DETAIL	
DATE : 05.12.2022		BUILDER : KHULNA SHIPYARD LIMITED, BANGLADESH	
APPROVED BY CLASS DATED :		OWNER : PAYRA PORT AUTHORITY, BANGLADESH	DRG. NO. : 01/22-H39 (SHT 1 OF 1) REV :0
APPROVED BY OWNER DATED :			

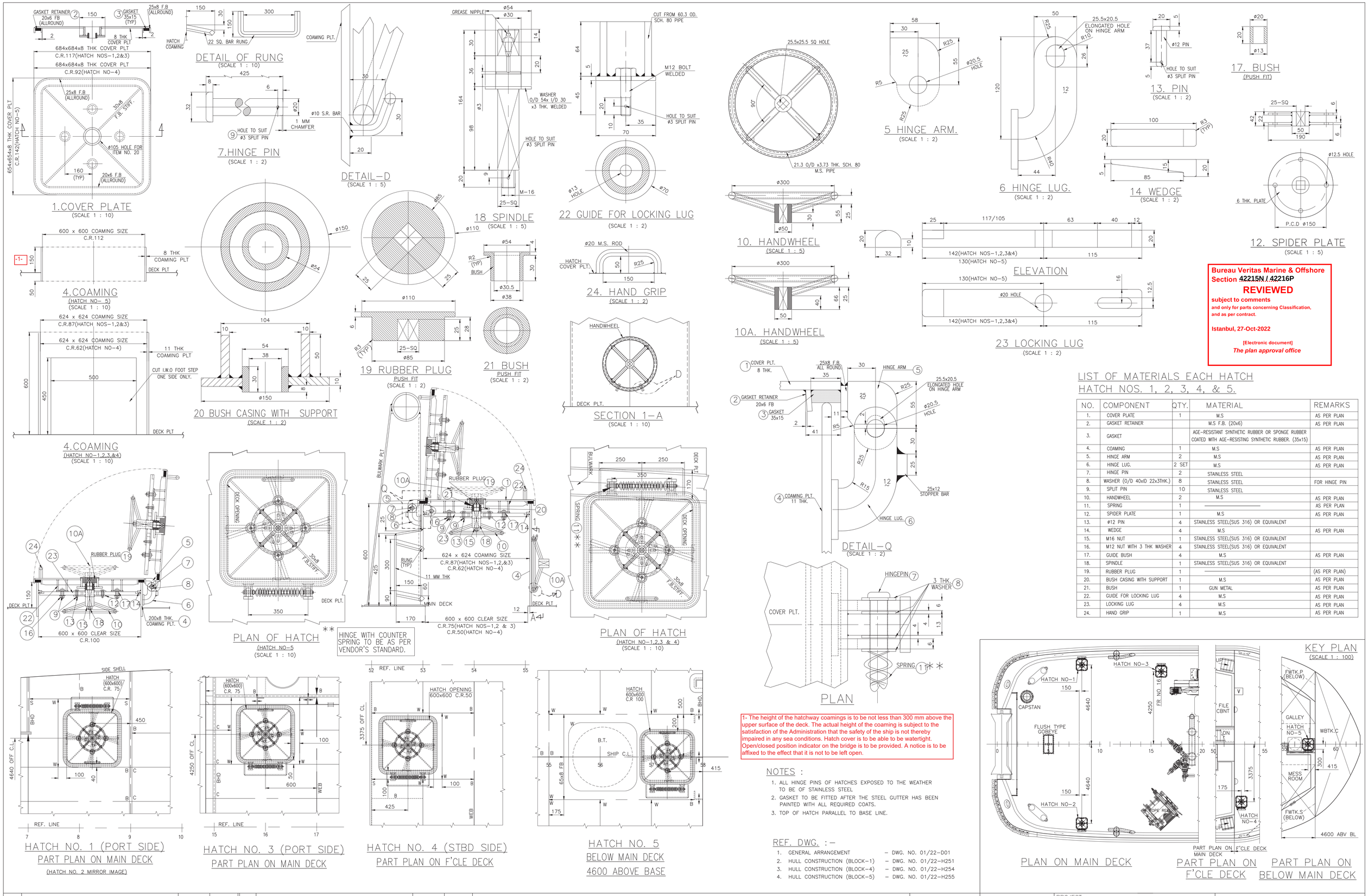

1- The height of the hatchway coamings is to be not less than 300 mm above the upper surface of the deck. The actual height of the coaming is subject to the satisfaction of the Administration that the safety of the ship is not thereby impaired in any sea conditions. Hatch cover is to be able to be watertight. Open/closed position indicator on the bridge is to be provided. A notice is to be affixed to the effect that it is not to be left open.

Bureau Veritas Marine & Offshore
Section 42215N / 42216P
REVIEWED
subject to comments
and only for parts concerning Classification, and as per contract.
Istanbul, 27-Oct-2022
[Electronic document]
The plan approval office

LIST OF MATERIALS EACH HATCH
HATCH NOS. 1, 2, 3, 4, & 5.

NO.	COMPONENT	QTY.	MATERIAL	REMARKS
1.	COVER PLATE	1	M.S	AS PER PLAN
2.	GASKET RETAINER		M.S F.B. (20x6)	AS PER PLAN
3.	GASKET		AGE-RESISTANT SYNTHETIC RUBBER OR SPONGE RUBBER COATED WITH AGE-RESISTING SYNTHETIC RUBBER. (35x15)	
4.	COAMING	1	M.S	AS PER PLAN
5.	HINGE ARM	2	M.S	AS PER PLAN
6.	HINGE LUG.	2 SET	M.S	AS PER PLAN
7.	HINGE PIN	2	STAINLESS STEEL	
8.	WASHER (O/D 40xID 22x3THK.)	8	STAINLESS STEEL	FOR HINGE PIN
9.	SPLIT PIN	10	STAINLESS STEEL	
10.	HANDWHEEL	2	M.S	AS PER PLAN
11.	SPRING	1	———	AS PER PLAN
12.	SPIDER PLATE	1	M.S	AS PER PLAN
13.	ø12 PIN	4	STAINLESS STEEL(SUS 316) OR EQUIVALENT	
14.	WEDGE	4	M.S	AS PER PLAN
15.	M16 NUT	1	STAINLESS STEEL(SUS 316) OR EQUIVALENT	
16.	M12 NUT WITH 3 THK WASHER	4	STAINLESS STEEL(SUS 316) OR EQUIVALENT	
17.	GUIDE BUSH	4	M.S	AS PER PLAN
18.	SPINDLE	1	STAINLESS STEEL(SUS 316) OR EQUIVALENT	
19.	RUBBER PLUG	1	———	(AS PER PLAN)
20.	BUSH CASING WITH SUPPORT	1	M.S	AS PER PLAN
21.	BUSH	1	GUN METAL	AS PER PLAN
22.	GUIDE FOR LOCKING LUG	4	M.S	AS PER PLAN
23.	LOCKING LUG	4	M.S	AS PER PLAN
24.	HAND GRIP	1	M.S	AS PER PLAN

NOTES :

1. ALL HINGE PINS OF HATCHES EXPOSED TO THE WEATHER TO BE OF STAINLESS STEEL
2. GASKET TO BE FITTED AFTER THE STEEL GUTTER HAS BEEN PAINTED WITH ALL REQUIRED COATS.
3. TOP OF HATCH PARALLEL TO BASE LINE.

REF. DWG. :-

1. GENERAL ARRANGEMENT – DWG. NO. 01/22-D01
2. HULL CONSTRUCTION (BLOCK-1) – DWG. NO. 01/22-H251
3. HULL CONSTRUCTION (BLOCK-4) – DWG. NO. 01/22-H254
4. HULL CONSTRUCTION (BLOCK-5) – DWG. NO. 01/22-H255

REV	DESCRIPTION OF ALTERATION	DATE	BY	REV	DESCRIPTION OF ALTERATION	DATE	BY

1. ALL STEEL MATERIAL ARE BV GRADE-A UNLESS STATED OTHERWISE.
2. YARD IS ADVISED NOT TO FABRICATE UNTIL DWG. IS APPROVED BY CLASS.
3. "HOLD" MARK ON DWG. INDICATES CLASS APPROVAL PENDING.

DRAWN : subrata
CHECKED : NAV
DATE : 13-10-2022
APPROVED BY CLASS DATED :
APPROVED BY OWNER DATED :

SCALE : 1:20
CLIENT'S HULL NO. : NB786 & NB787

PROJECT : 70T BOLLARD PULL TUG
TITLE : HATCHES DISPOSITION & DETAIL
BUILDER : KHULNA SHIPYARD LIMITED, BANGLADESH
OWNER : PAYRA PORT AUTHORITY, BANGLADESH

DESIGNER :
NAVNAUTIK PTE LTD
NAVAL ARCHITECTS, MARINE ENGINEERS & MARINE SURVEYORS.
540 SIMS AVENUE
#02-04 SIMS AVE CENTRE
SINGAPORE 387603
TEL: +65 67417220
FAX: +65 67417219
E-mail: NPL@navnautik.com or navnautik@gmail.com

DRG. NO. : 01/22-H18 (SHT 1 OF 1)
REV : 0

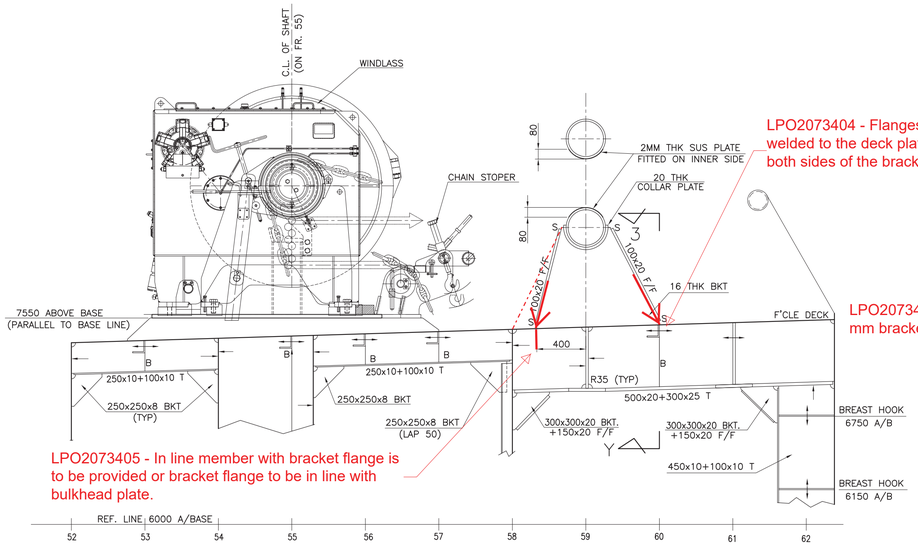

SECTION AT CENTRE LINE

LPO2073404 - Flanges are to be welded to the deck plate. Valid for both sides of the bracket.

LPO2073402 - 500x300 mm bracket is to be fitted.

LPO2073405 - In line member with bracket flange is to be provided or bracket flange to be in line with bulkhead plate.

LPO2073398 - Typical, Edge prepation and deep penetration welding is to be provided for the connection of in line supporting structures.

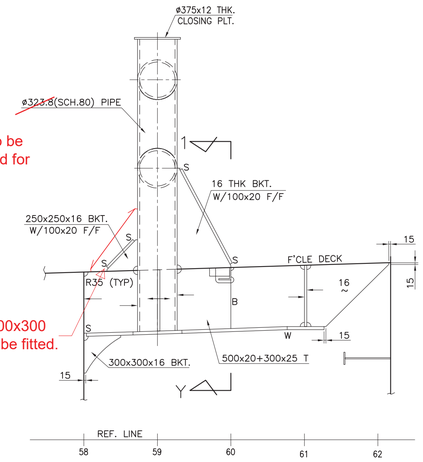

SECTION 867 OFF C.L. STBD.
(LOOKING INBOARD)

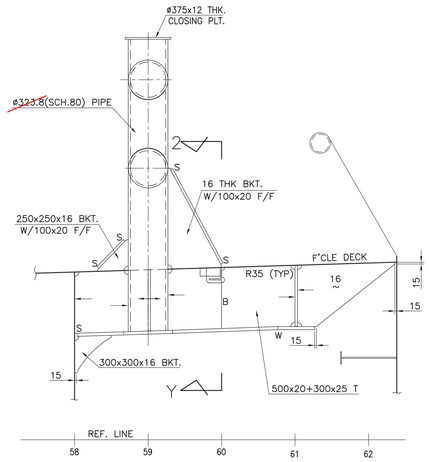

SECTION 367 OFF C.L. PORT.
(LOOKING OUTBOARD)

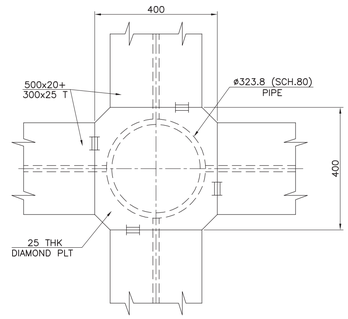

SECTION 1–X
(SCALE–1:10)

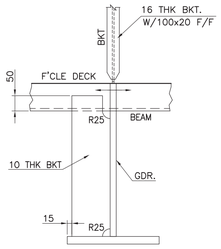

SECTION 1–Y
(SECTION 2–Y & 3–Y SIMILAR)
(SCALE–1:10)

LPO2073399 - Towing post members are be AH36 Grade including brackets.

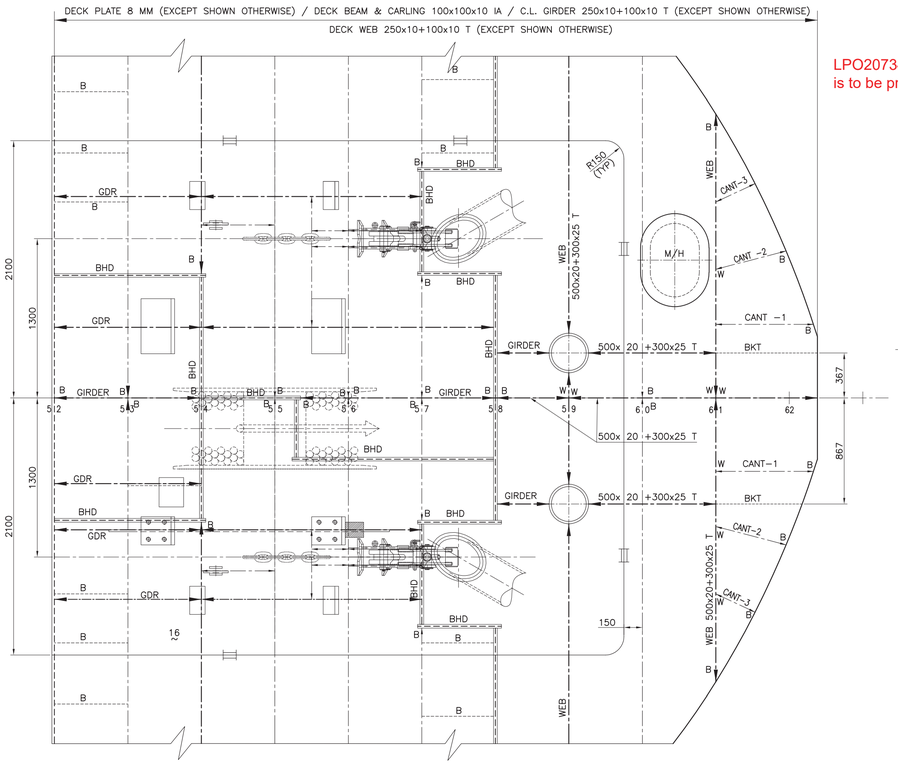

PLAN ON FORECASTLE DECK

LPO2073400 - DN350 SCH 80 AH36 Pipe is to be provided.

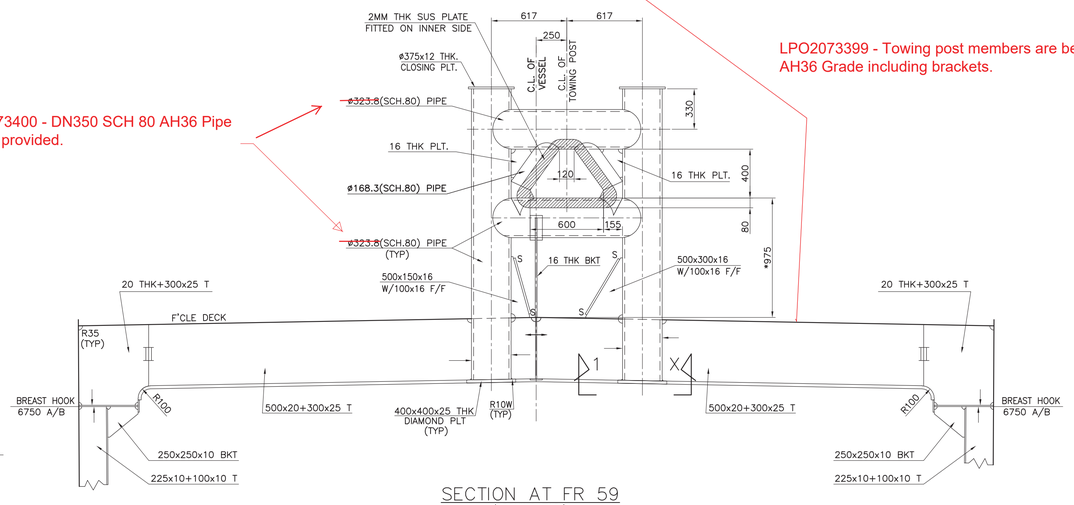

SECTION AT FR 59
(LOOKING FWD.)

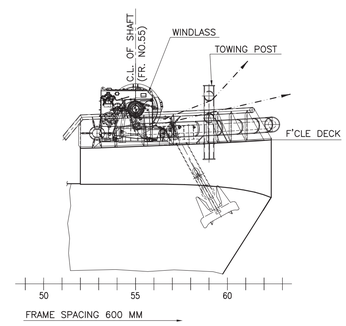

PART CENTRELINE SECTION

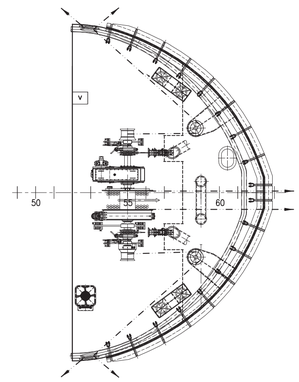

PART F'CLE DECK PLAN

KEY PLAN
(SCALE 1:100)

LPO2073397 - Towing post and its substructure examined under a force equal to 2 times the SWL = 175 tons. (2x87.5 tons)

Bureau Veritas Marine & Offshore
Section 42215N / 42216P
REVIEWED
subject to comments
and only for parts concerning Classification, and as per contract.
Istanbul, 20-Feb-2023
[Electronic document]
The plan approval office

NOTE: –

1. THE F'CLE DECK HAS CAMBER. YARD TO ENSURE THAT WINDLASS SEATING IS PARALLEL TO BASE LINE, TOWING POST AXIS PERPENDICULAR TO BASE LINE
2. DIMENSIONS MARKED WITH (*) ARE TO BE MEASURED FROM MOULDED LINE OF F'CLE DECK AT C.L. OF FRAME 59

REF. DRAWING: –

1) GENERAL ARRANGEMENT – DWG. NO. 01/22–D01
2) TOWING, MOORING & ANCHORING ARRGT. – DWG. NO. 01/22–H41
3) FWD WINDLASS FOUNDATION – DWG. NO. 01/22–H44
4) HULL CONST. BLOCK 1 – DWG. NO. 01/22–H251

REV	DESCRIPTION OF ALTERATION	DATE	BY	REV	DESCRIPTION OF ALTERATION	DATE	BY

1. ALL STEEL MATERIAL ARE BV GRADE–A UNLESS STATED OTHERWISE.
2. YARD IS ADVISED NOT TO FABRICATE UNTIL DWG. IS APPROVED BY CLASS.
3. ''HOLD'' MARK ON DWG. INDICATES CLASS APPROVAL PENDING.

DRAWN : garai	SCALE : 1 : 25	PROJECT : 70T BOLLARD PULL TUG	DESIGNER : NAVNAUTIK PTE LTD NAVAL ARCHITECTS, MARINE ENGINEERS & MARINE SURVEYORS. 540 SIMS AVENUE #02–04 SIMS AVE CENTRE SINGAPORE 387603 TEL: +65 67417220 FAX: +65 67417219 E–mail: NPL@navnautik.com or navnautik@gmail.com
CHECKED : NAV	CLIENT'S HULL NO. : NB786 & NB787	TITLE : FWD TOWING POST FOUNDATION	
DATE : 23.11.2022		BUILDER : KHULNA SHIPYARD LIMITED, BANGLADESH	
APPROVED BY CLASS DATED :		OWNER : PAYRA PORT AUTHORITY, BANGLADESH	DRG. NO. : 01/22–H46 (SHT 1 OF 1) REV :0
APPROVED BY OWNER DATED :			

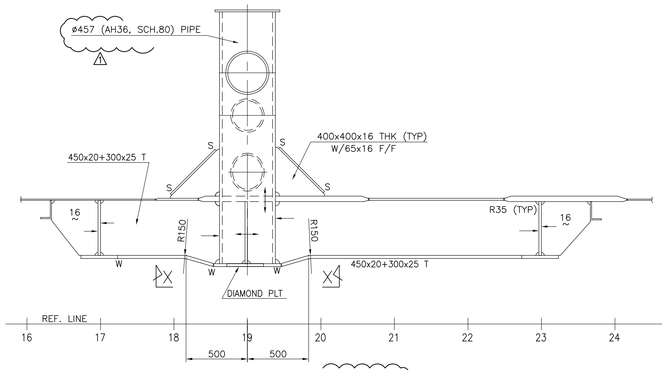

LONGL. SEC. 729 OFF C.L. (P)
(LOOKING OUTBOARD)

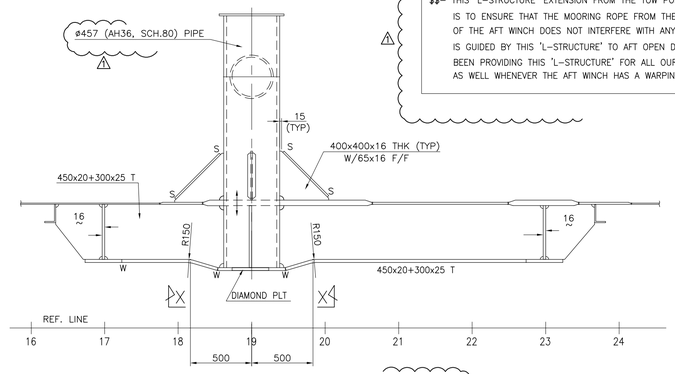

LONGL. SEC. 729 OFF C.L. (S)
(LOOKING INBOARD)

$$– THIS 'L–STRUCTURE' EXTENSION FROM THE TOW POST ON PORT SIDE IS TO ENSURE THAT THE MOORING ROPE FROM THE WARPING DRUM OF THE AFT WINCH DOES NOT INTERFERE WITH ANY DECK ITEMS AND IS GUIDED BY THIS 'L–STRUCTURE' TO AFT OPEN DECK. WE HAVE BEEN PROVIDING THIS 'L–STRUCTURE' FOR ALL OUR EARLIER 70T TUGS AS WELL WHENEVER THE AFT WINCH HAS A WARPING DRUM.

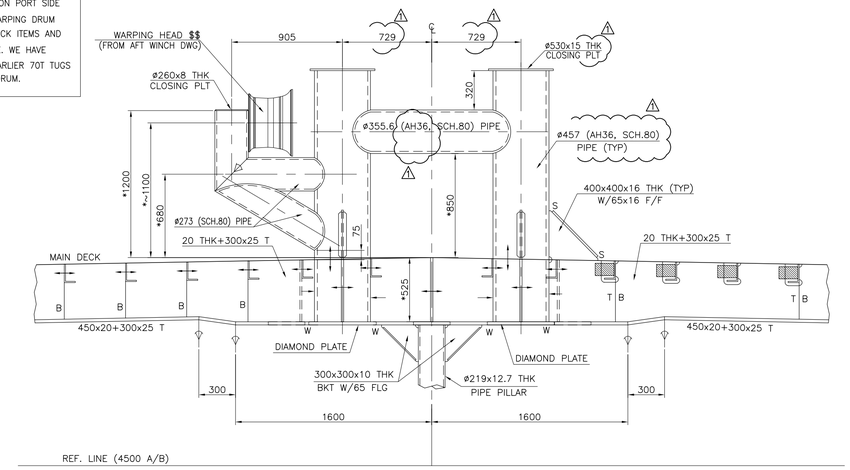

SECTION AT FR. 19
(LOOKING FWD.)

DECK PLATE 10 MM THK. (FR.0–FR.26+300) & 8(7.5) MM (FR26+300 TO FR52) (EXCEPT SHOWN OTHERWISE) / DECK LONGL. & CARLING 150x90x10 IA (FR.0–FR.30) / C.L. GIRDER 450x20+300x25 T(FR.15–FR.30) / SIDE GIRDER 200x10+100x10 T(EXCEPT SHOWN OTHERWISE) / DECK WEB 450x20+300x25 T (FR.15–FR.30) / PILLARS ø219x12.7 THK. SCH. 80 PIPE

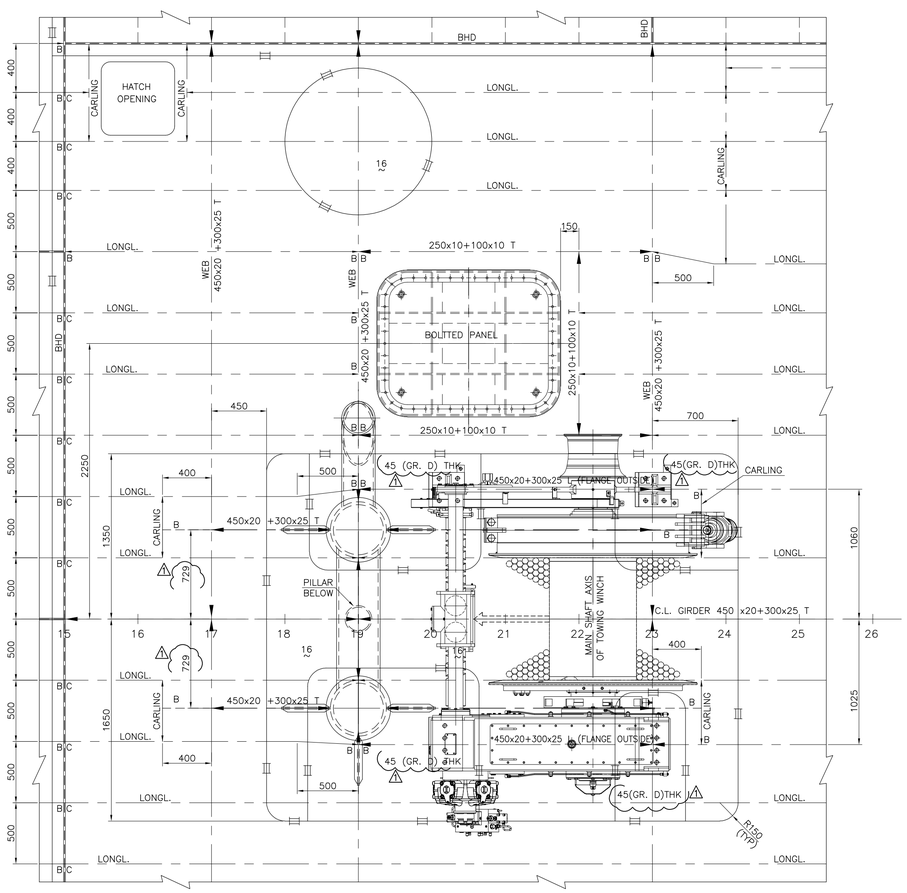

PART PLAN ON MAIN DECK

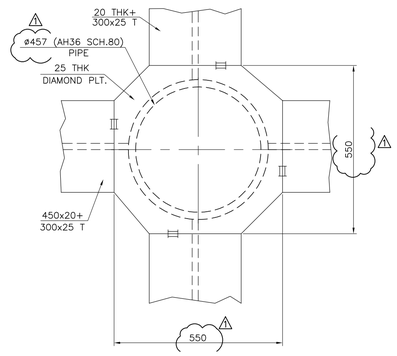

SECTION X–X
(SCALE 1:10)

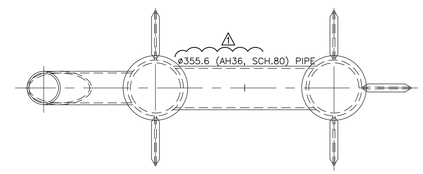

TOWING POST PLAN VIEW
(LOOKING FWD.)

Bureau Veritas Marine & Offshore Section 42215N / 42216P
REVIEWED
only for parts concerning Classification, and as per contract.
Istanbul, 19-Jan-2023
[Electronic document]
The plan approval office

CLASS COMMENT–
1. TOWING POST AND ITS SUBSTRUCTURE EXAMINED UNDER A FORCE EQUAL TO 2 TIMES THE SWL = 175 TONS (2x87.5 TONS)
2. EDGE PREPARATION AND DEEP PENETRATION WELDING IS TO BE PROVIDED FOR THE CONNECTION OF IN LINE SUPPORTING STRUCTURES.

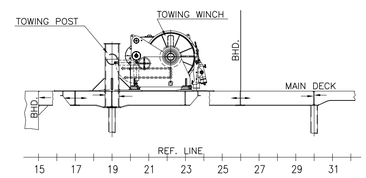

PART CENTRELINE SECTION

NOTE: –

1. THE MAIN DECK HAS CAMBER. YARD TO ENSURE THAT WINCH SEATING IS PARALLEL TO BASE LINE, TOWING POST AXIS PERPENDICULAR TO BASE LINE
2. DIMENSIONS MARKED WITH (*) ARE TO BE MEASURED FROM MOULDED LINE OF MAIN DECK.

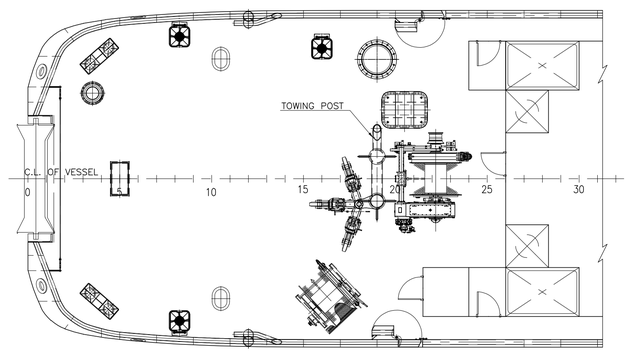

PART MAIN DECK PLAN

KEY PLAN
(SCALE 1:100)

REF. DRAWING: –

1) GENERAL ARRANGEMENT – DWG. NO. 01/22–D01
2) TOWING, MOORING & ANCHORING ARRGT. – DWG. NO. 01/22–H41
3) HULL CONST. BLOCK 4 – DWG. NO. 01/22–H254
4) AFT TOWING WINCH FOUNDATION – DWG. NO. 01/22–H43

REV	DESCRIPTION OF ALTERATION	DATE	BY
1	REVIEWED BY CLASS VIDE ITB–TPO/2022/003489/SYL DATED 12.12.2022	15.12.2022	garai

1. ALL STEEL MATERIAL ARE BV GRADE–A UNLESS STATED OTHERWISE.
2. YARD IS ADVISED NOT TO FABRICATE UNTIL DWG. IS APPROVED BY CLASS.
3. ''HOLD'' MARK ON DWG. INDICATES CLASS APPROVAL PENDING.

DRAWN : garai	SCALE : 1 : 25
CHECKED : NAV	CLIENT'S HULL NO. : NB786 & NB787
DATE : 31.10.2022	
APPROVED BY CLASS DATED : 12.12.2022	
APPROVED BY OWNER DATED :	

PROJECT : 70T BOLLARD PULL TUG
TITLE : AFT TOWING POST FOUNDATION
BUILDER : KHULNA SHIPYARD LIMITED, BANGLADESH
OWNER : PAYRA PORT AUTHORITY, BANGLADESH

DESIGNER :
NAVNAUTIK PTE LTD
NAVAL ARCHITECTS, MARINE ENGINEERS & MARINE SURVEYORS.
540 SIMS AVENUE
#02–04 SIMS AVE CENTRE
SINGAPORE 387603
TEL: +65 67417220
FAX: +65 67417219
E–mail: NPL@navnautik.com or navnautik@gmail.com

DRG. NO. : 01/22–H45 (SHT 1 OF 1)
REV : 1

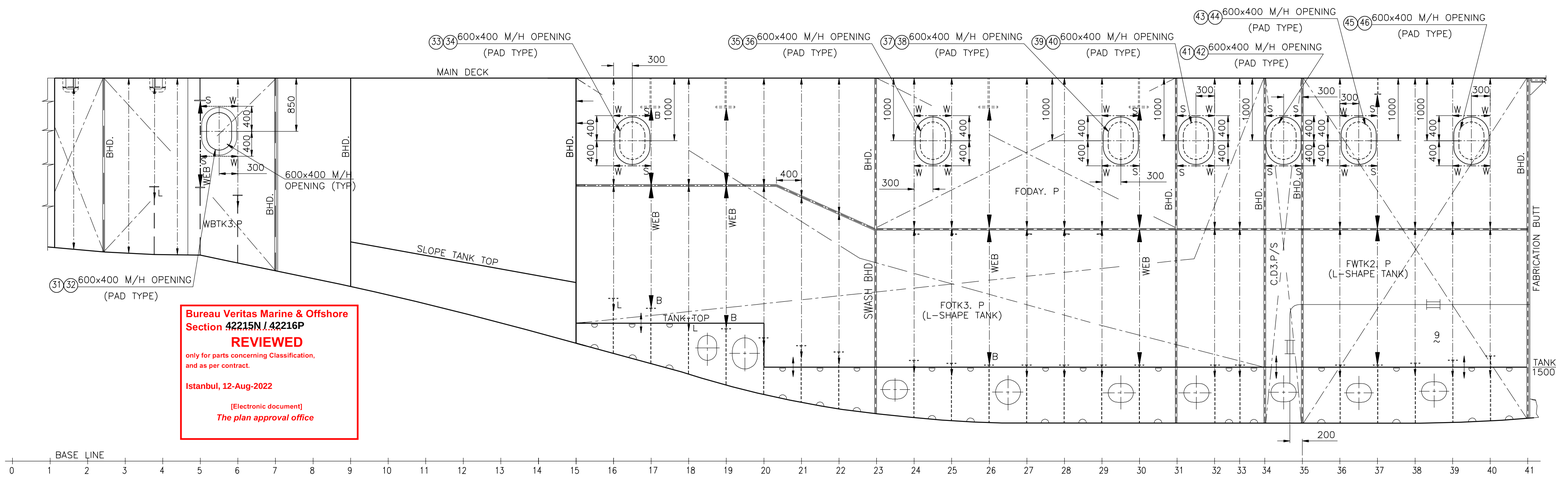

Bureau Veritas Marine & Offshore
Section ~~42215N / 42216P~~
REVIEWED
only for parts concerning Classification, and as per contract.
Istanbul, 12-Aug-2022
[Electronic document]
The plan approval office

LONG. BHD. 4700 OFF C.L.
(PORT SHOWN STBD. MIRROR IMAGE)

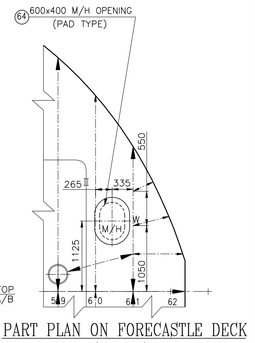

PART PLAN ON FORECASTLE DECK
(PORT ONLY)

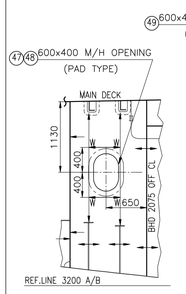

SECTION AT FR 2
(PORT SHOWN STBD SIMILAR)
(LOOKING FWD)

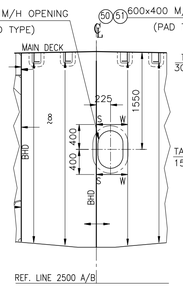

SECTION AT FR 3
(PORT SHOWN STBD SIMILAR)
(LOOKING FWD)

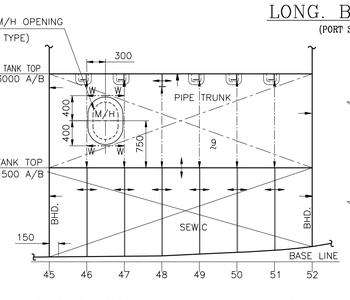

LONG. BHD. 1200 OFF C.L.
(PORT SHOWN STBD. MIRROR IMAGE)
(LOOKING OUTBOARD)

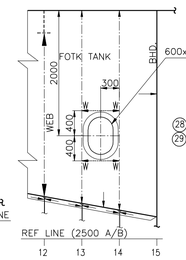

LONG. BHD. 3000 OFF C.L.
(PORT SHOWN STBD. MIRROR IMAGE)
(LOOKING OUTBOARD)

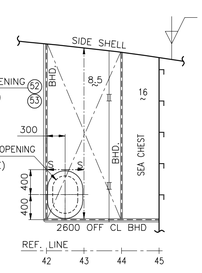

TANK TOP PLAN 2500 A/B
(PORT SHOWN STBD SIMILAR)

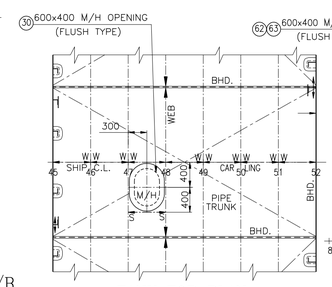

TANK TOP PLAN
3000 ABOVE BASE

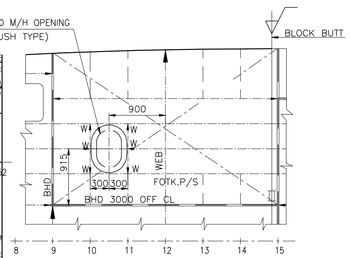

PART PLAN ON MAIN DECK
(PORT SHOWN STBD MIRROR IMAGE)

REF. DWG.:–

1. GENERAL ARRANGEMENT – 01/22–D01
2. DIMENSIONAL PROFILE – 01/22–D03
3. HOUSES ON MAIN DECK – 01/22–H14
4. HULL CONSTRUCTION (BLOCK–1) – 01/22–H251
5. HULL CONSTRUCTION (BLOCK–2) – 01/22–H252
6. HULL CONSTRUCTION (BLOCK–3) – 01/22–H253
7. HULL CONSTRUCTION (BLOCK–5) – 01/22–H255

LIST OF MANHOLES:–

NO.	MANHOLE TYPE	WALL CUT SIZE	CLEAR SIZE	COVER SIZE	LOCATION	QTY.	REMARKS
1.	"B TYPE"	600 x 400	600 x 400	720 x 520	WBTK. (P) FR. 10–11	1	STANDARD
2.	"B TYPE"	600 x 400	600 x 400	720 x 520	LOTK. (P) FR. 9–10	1	STANDARD
3.	"B TYPE"	600 x 400	600 x 400	720 x 520	LOTK. (S) FR. 9–10	1	STANDARD
4.	"B TYPE"	600 x 400	600 x 400	720 x 520	WBTK. (S) FR. 10–11	1	STANDARD
5.	"B TYPE"	600 x 400	600 x 400	720 x 520	WBTK. (P) FR. 13–14	1	STANDARD
6.	"B TYPE"	600 x 400	600 x 400	720 x 520	HYDTK. (P) FR. 11–12	1	STANDARD
7.	"B TYPE"	600 x 400	600 x 400	720 x 520	WBTK. (S) FR. 13–14	1	STANDARD
8.	"A TYPE"	600 x 400	600 x 400	720 x 530	BILGE TK. (P) FR. 17–18	1	STANDARD
9.	"A TYPE"	600 x 400	600 x 400	720 x 520	FOTK. (P) FR. 19–20	1	STANDARD
10.	"A TYPE"	600 x 400	600 x 400	720 x 520	FOTK. (S) FR. 19–20	1	STANDARD
11.	"A TYPE"	600 x 400	600 x 400	720 x 520	DIRTY. TK. (P) FR. 19–20	1	STANDARD
12.	"A TYPE"	600 x 400	600 x 400	720 x 520	OFLOW. TK. (S) FR. 23–24	1	STANDARD
13.	"A TYPE"	600 x 400	600 x 400	720 x 520	C.D.4.C. TK. (P) FR. 27–28	1	STANDARD
14.	"A TYPE"	600 x 400	600 x 400	720 x 520	FOAM. TK. (P) FR. 28–29	1	STANDARD
15.	"A TYPE"	600 x 400	600 x 400	720 x 520	FOTK. (P) FR. 31–32	1	STANDARD
16.	"A TYPE"	600 x 400	600 x 400	720 x 520	FOTK. (S) FR. 31–32	1	STANDARD
17.	"A TYPE"	600 x 400	600 x 400	720 x 520	C.D. (P) FR. 34–35	1	STANDARD
18.	"A TYPE"	600 x 400	600 x 400	720 x 520	C.D. (S) FR. 34–35	1	STANDARD
19.	"A TYPE"	600 x 400	600 x 400	720 x 520	C.D. (S) FR. 36–37	1	STANDARD
20.	"A TYPE"	600 x 400	600 x 400	720 x 520	FWTK. (P) FR. 37–38	1	STANDARD
21.	"A TYPE"	600 x 400	600 x 400	720 x 520	FWTK. (S) FR. 37–38	1	STANDARD
22.	"A TYPE"	600 x 400	600 x 400	720 x 520	FWTK. (P) FR. 40–41	1	STANDARD
23.	"A TYPE"	600 x 400	600 x 400	720 x 520	FWTK. (S) FR. 40–41	1	STANDARD
24.	"A TYPE"	600 x 400	600 x 400	720 x 520	C.D. (P) FR. 41–42	1	STANDARD
25.	"A TYPE"	600 x 400	600 x 400	720 x 520	DISP. (P) FR. 42–43		STANDARD
26.	"A TYPE"	600 x 400	600 x 400	720 x 520	SEW.C. TK. (S) FR. 49–50	1	STANDARD
27.	PAD TYPE	ø400	ø400	ø560	C.D. (S) FR. 52–53	1	STANDARD
28.	PAD TYPE	754 x 554	600 x 400	730 x 530	FO.TK. (P) FR. 42–43	1	STANDARD
29.	PAD TYPE	754 x 554	600 x 400	730 x 530	FO.TK. (S) FR. 42–43	1	STANDARD
30.	FLUSH TYPE	600 x 400	600 x 400	720 x 520	PIPE TRUNK (S) FR. 47–48	1	STANDARD
31.	"B TYPE"	600 x 400	600 x 400	720 x 520	WB. TK. (P) (4700 OFF C.L) FR. 05–06	1	STANDARD
32.	"B TYPE"	600 x 400	600 x 400	720 x 520	WB. TK. (S) (4700 OFF C.L) FR. 05–06	1	STANDARD
33.	"B TYPE"	600 x 400	600 x 400	720 x 520	FO. TK. (P) (4700 OFF C.L) FR. 16–17	1	STANDARD
34.	"B TYPE"	600 x 400	600 x 400	720 x 520	FO. TK. (S) (4700 OFF C.L) FR. 16–17	1	STANDARD
35.	"B TYPE"	600 x 400	600 x 400	720 x 520	FODAY TK. (P) (4700 OFF C.L) FR. 24–25	1	STANDARD
36.	"B TYPE"	600 x 400	600 x 400	720 x 520	FODAY TK. (S) (4700 OFF C.L) FR. 24–25	1	STANDARD
37.	"B TYPE"	600 x 400	600 x 400	720 x 520	FODAY TK. (P) (4700 OFF C.L) FR. 29–30	1	STANDARD
38.	"B TYPE"	600 x 400	600 x 400	720 x 520	FODAY TK. (S) (4700 OFF C.L) FR. 29–30	1	STANDARD
39.	"B TYPE"	600 x 400	600 x 400	720 x 520	FO. TK. (P) (4700 OFF C.L) FR. 31–32	1	STANDARD
40.	"B TYPE"	600 x 400	600 x 400	720 x 520	FO. TK. (S) (4700 OFF C.L) FR. 31–32	1	STANDARD
41.	"B TYPE"	600 x 400	600 x 400	720 x 520	C.D. (P) (4700 OFF C.L) FR. 34–35	1	STANDARD
42.	"B TYPE"	600 x 400	600 x 400	720 x 520	C.D. (S) (4700 OFF C.L) FR. 34–35	1	STANDARD
43.	"B TYPE"	600 x 400	600 x 400	720 x 520	FW. TK. (P) (4700 OFF C.L) FR. 36–37	1	STANDARD
44.	"B TYPE"	600 x 400	600 x 400	720 x 520	FW. TK. (S) (4700 OFF C.L) FR. 36–37	1	STANDARD
45.	"B TYPE"	600 x 400	600 x 400	720 x 520	FW. TK. (P) (4700 OFF C.L) FR. 39–40	1	STANDARD
46.	"B TYPE"	600 x 400	600 x 400	720 x 520	FW. TK. (S) (4700 OFF C.L) FR. 39–40	1	STANDARD
47.	"B TYPE"	600 x 400	600 x 400	720 x 520	WB. TK. (P) FR. 02	1	STANDARD
48.	"B TYPE"	600 x 400	600 x 400	720 x 520	WB. TK. (S) FR. 02	1	STANDARD
49.	"B TYPE"	600 x 400	600 x 400	720 x 520	TLOTK. (S) FR. 03	1	STANDARD
50.	"B TYPE"	600 x 400	600 x 400	720 x 520	PIPE TRUNK. (P) FR. 46–47	1	STANDARD
51.	"B TYPE"	600 x 400	600 x 400	720 x 520	PIPE TRUNK. (S) FR. 46–47	1	STANDARD
52.	"B TYPE"	600 x 400	600 x 400	720 x 520	FO (P) (3000 OFF C.L.) FR. 13–14	1	STANDARD
53.	"B TYPE"	600 x 400	600 x 400	720 x 520	FO (S) (3000 OFF C.L.) FR. 13–14	1	STANDARD
54.	"B TYPE"	600 x 400	600 x 400	720 x 520	CHAIN LOCKER (P) FR. 52	1	STANDARD
55.	"B TYPE"	600 x 400	600 x 400	720 x 520	CHAIN LOCKER (S) FR. 52	1	STANDARD
56.	"B TYPE"	600 x 400	600 x 400	720 x 520	C.D. (P) FR. 52	1	STANDARD
57.	"B TYPE"	600 x 400	600 x 400	720 x 520	C.D. (S) FR. 52	1	STANDARD
58.	HANDHOLE	ø200	ø200	ø360	CHAIN LOCKER (P) FR. 52	1	STANDARD
59.	HANDHOLE	ø200	ø200	ø360	CHAIN LOCKER (S) FR. 52	1	STANDARD
60.	"B TYPE"	600 x 400	600 x 400	720 x 520	FWTK. (P) (1200 OFF C.L.) FR. 55–56	1	STANDARD
61.	"B TYPE"	600 x 400	600 x 400	720 x 520	FWTK. (S) (1200 OFF C.L.) FR. 55–56	1	STANDARD
62.	FLUSH	754 x 554	600 x 400	730 x 530	M/DECK FOTK. (P) FR. 10–11	1	STANDARD
63.	FLUSH	754 x 554	600 x 400	730 x 530	M/DECK FOTK. (S) FR. 10–11	1	STANDARD
64.	"B TYPE"	600 x 400	600 x 400	720 x 520	FORECASTLE DK. WBTK. (P) FR. 60–61	1	STANDARD
65.	"B TYPE"	600 x 400	600 x 400	720 x 520	VENT ROOM (P) (900 OFF C.L.) FR. 28–29	1	STANDARD
66	"B TYPE"	600 x 400	600 x 400	720 x 520	VENT ROOM (S) (900 OFF C.L.) FR. 28–29	1	STANDARD

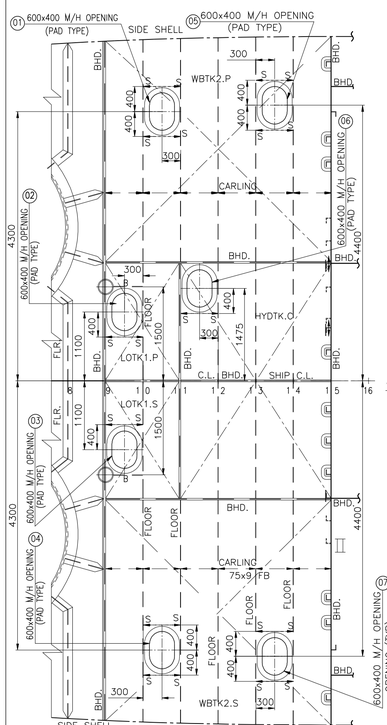

TANK TOP PLAN(SLOPE)
FR.9 – 3500 A/B & FR.15 – 2850 A/B

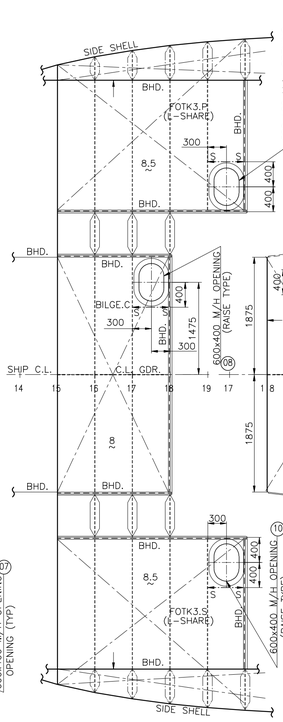

TANK TOP PLAN 2200 ABOVE BASE

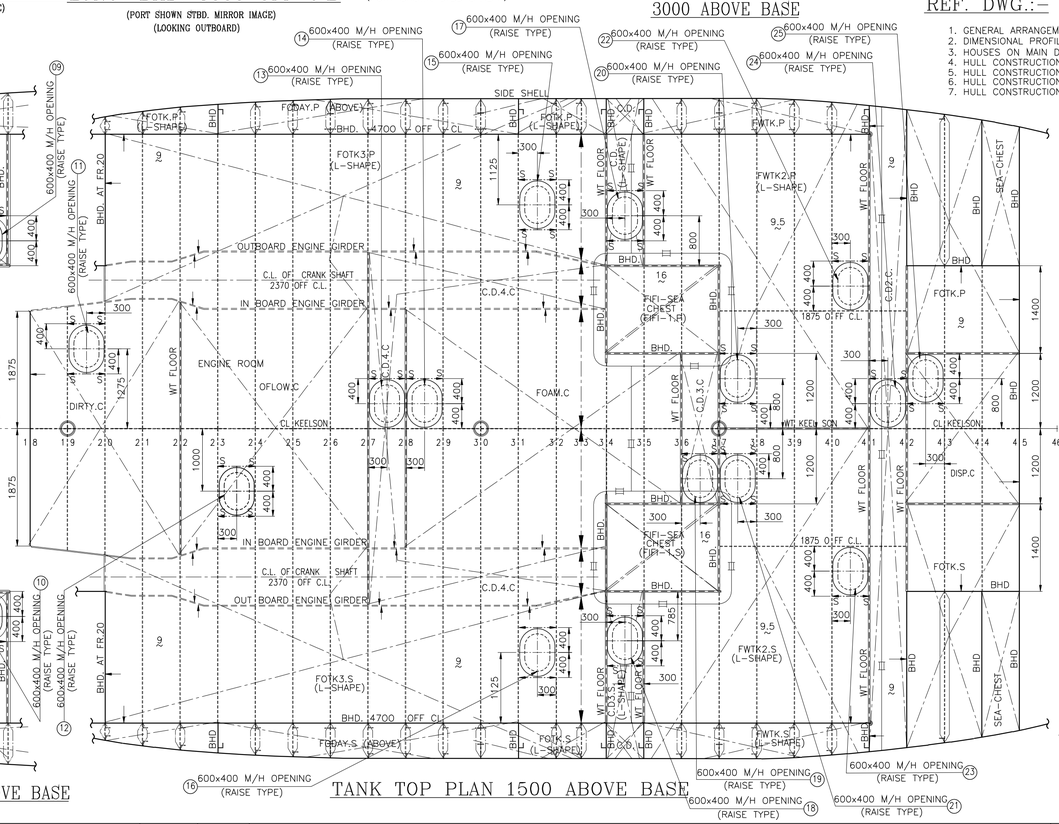

TANK TOP PLAN 1500 ABOVE BASE

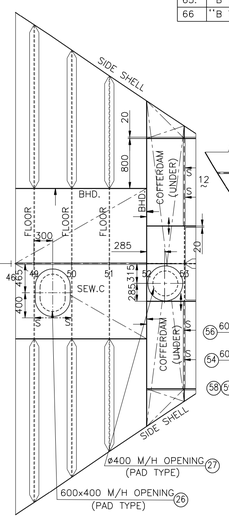

TANK TOP PLAN
1500 ABOVE BASE

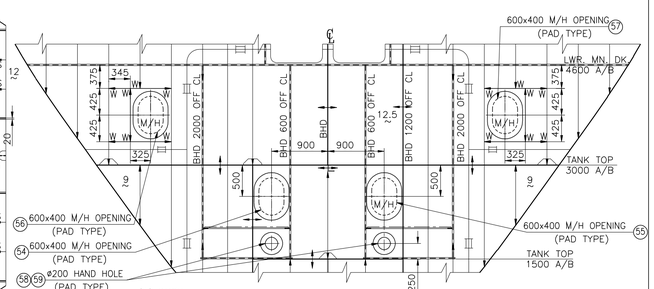

SECTION AT FR. 52
(LOOKING FWD.)

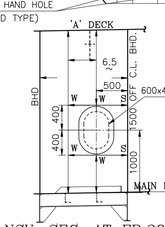

TRANSV. SEC. AT FR.28+200
(PORT SHOWN STBD MIRROR IMAGE)
(LOOKING FWD.)

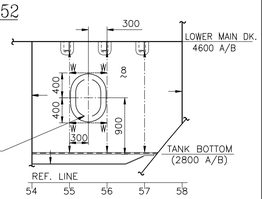

LONG. BHD 1200 OFF C.L.
(PORT SHOWN STBD. MIRROR IMAGE)

REV	DESCRIPTION OF ALTERATION	DATE	BY	REV	DESCRIPTION OF ALTERATION	DATE	BY

1. ALL STEEL MATERIAL ARE BV GRADE–A UNLESS STATED OTHERWISE.
2. YARD IS ADVISED NOT TO FABRICATE UNTIL DWG. IS APPROVED BY CLASS.
3. "HOLD" MARK ON DWG. INDICATES CLASS APPROVAL PENDING.

DRAWN : subrata	SCALE : 1 : 50	PROJECT : 70T BOLLARD PULL TUG	DESIGNER : NAVNAUTIK PTE LTD. NAVAL ARCHITECTS, MARINE ENGINEERS & MARINE SURVEYORS. 540 SIMS AVENUE #02–04 SIMS AVE CENTRE SINGAPORE 387603 TEL: +65 67417220 FAX: +65 67417219 E–mail: NPL@navnautik.com or navnautik@gmail.com
CHECKED : partha	CLIENT'S HULL NO. : NB786 & NB787	TITLE : MANHOLE DISPOSITION & DETAIL	
DATE : 01.08.2022		BUILDER : KHULNA SHIPYARD LIMITED, BANGLADESH	
APPROVED BY CLASS DATED :		OWNER : PAYRA PORT AUTHORITY, BANGLADESH	DRG. NO. : 01/22–H19 (SHT 1 OF 2) REV :0
APPROVED BY OWNER DATED :			

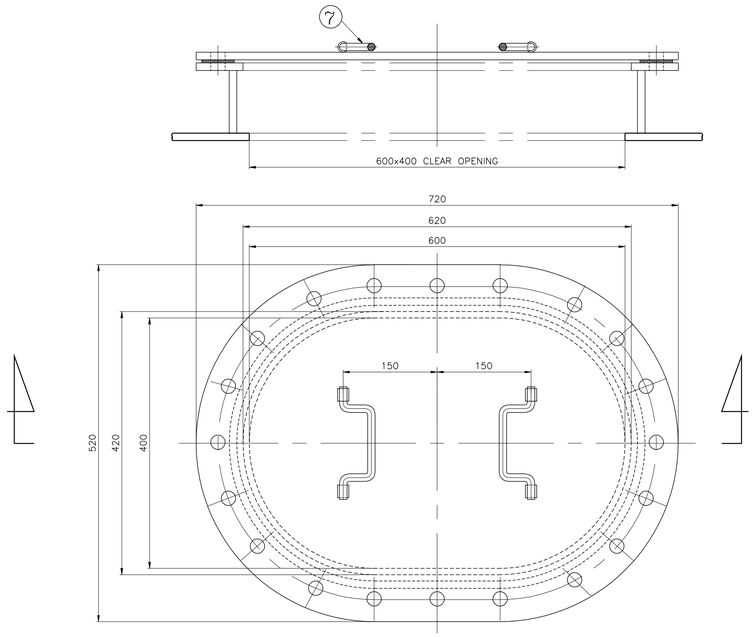

RAISED TYPE MANHOLE 600x400
(STANDARD ''A TYPE'')
(SCALE N.T.S)

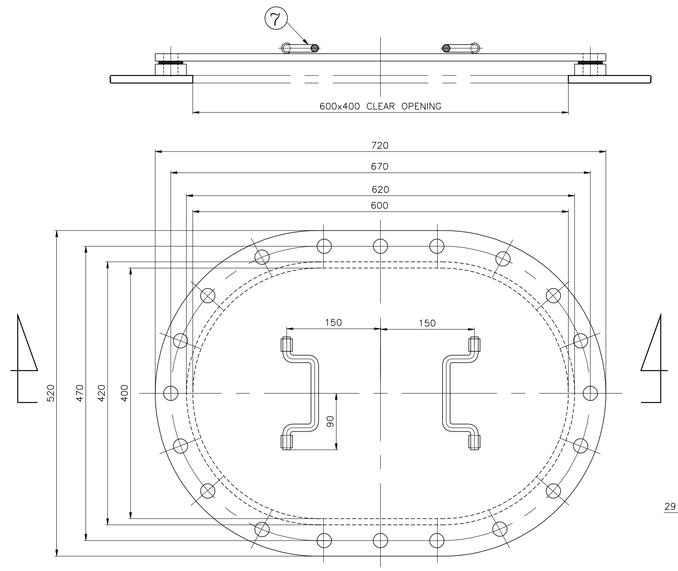

PAD TYPE MANHOLE 600x400
(STANDARD ''B TYPE'')
(SCALE 1:5)

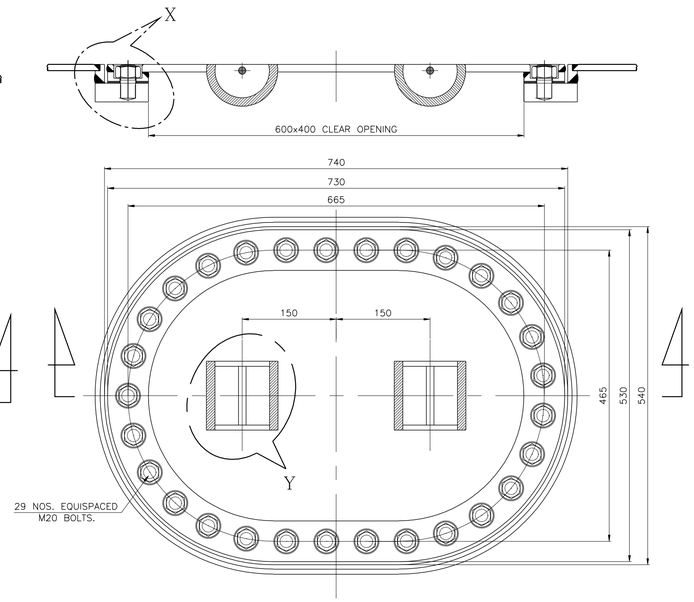

FLUSH TYPE MANHOLE
(SCALE 1:5)

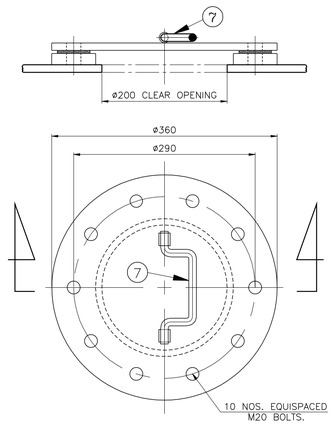

PAD TYPE HAND HOLE DIA 200
FOR CHAIN LKR. BHD.
(SCALE 1 : 5)

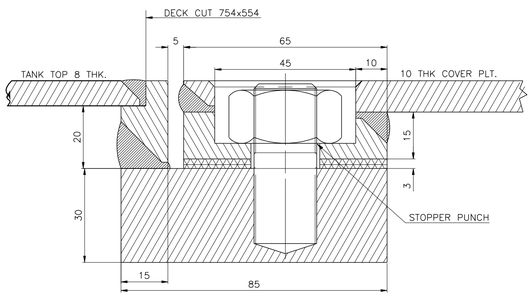

DETAIL – X
(SCALE 1:1)

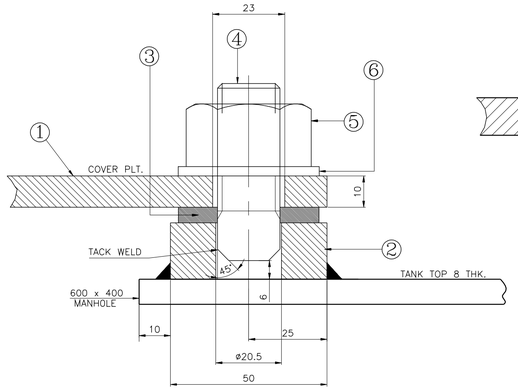

DETAIL OF SECURING PAD TYPE
(SCALE 1:1)

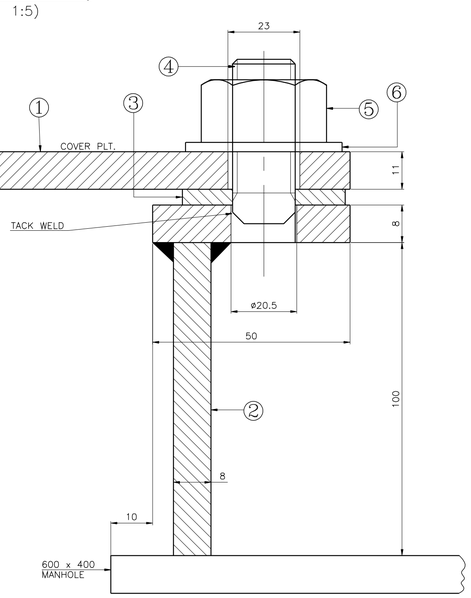

DETAIL OF SECURING RAISED TYPE
(SCALE 1 : 1)

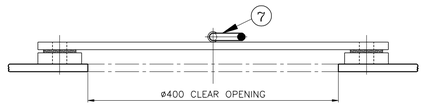

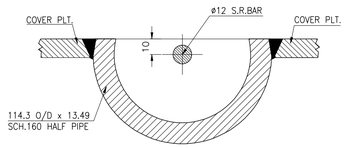

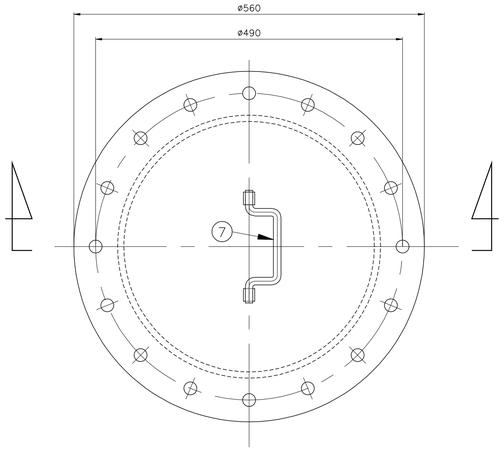

PAD TYPE ø400 MANHOLE (63)
(SCALE 1:5)

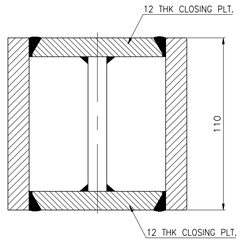

DETAIL – Y
SCALE 1:2

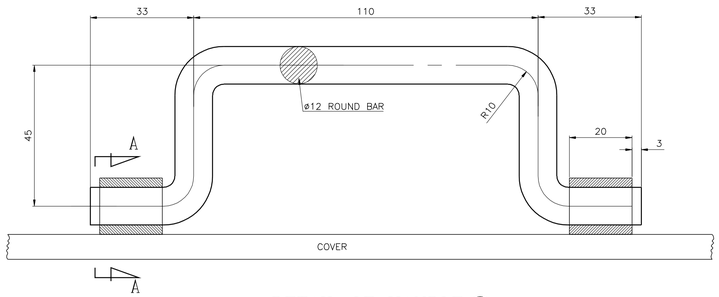

DETAIL OF HANDLE (7)
(SCALE 1:1)

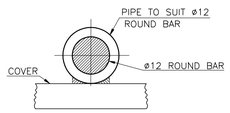

SEC A–A
(SCALE 1:1)

NOTE :–

1. COVER PLATES TO BE BEAD WELDED FOR IDENTIFICATION
2. GASKET a) WATER AGE RESISTING GOOD RUBBER OR EQUIVALENT.
   b) OIL PROOF SYNTHETIC RUBBER OR EQUIVALENT.

BUREAU VERITAS
Stamped document, refer to 1st page

NO.	COMPONENT	MATERIAL	REMARKS
1	COVER	MILD STEEL	FOR DETAILS REFER MAKER'S LIST OF 'A' TYPE & 'B' TYPE MANHOLE
2	COAMING / PAD	MILD STEEL	
3	GASKET	OIL PROOF RUBBER OR AGE RESISTING RUBBER	
4	M20 STUD BOLT	STAINLESS STEEL (SUS 314) OR EQUIVALENT	
5	M20 HEXAGON NUT	STAINLESS STEEL (SUS 314)	
6	WASHER (3MM THK.)	MILD STEEL	
7	HANDLE	SOLID ROUND BAR–MILD STEEL	

REV	DESCRIPTION OF ALTERATION	DATE	BY	REV	DESCRIPTION OF ALTERATION	DATE	BY

1. ALL STEEL MATERIAL ARE BV GRADE–A UNLESS STATED OTHERWISE.
2. YARD IS ADVISED NOT TO FABRICATE UNTIL DWG. IS APPROVED BY CLASS.
3. ''HOLD'' MARK ON DWG. INDICATES CLASS APPROVAL PENDING.

DRAWN : subrata
CHECKED : partha
DATE : 01.08.2022
APPROVED BY CLASS DATED :
APPROVED BY OWNER DATED :

SCALE : 1:20
CLIENT'S HULL NO. : NB786 & NB787

PROJECT : 70T BOLLARD PULL TUG
TITLE : MANHOLE DISPOSITION & DETAIL
BUILDER : KHULNA SHIPYARD LIMITED, BANGLADESH
OWNER : PAYRA PORT AUTHORITY, BANGLADESH

DESIGNER :
NAVNAUTIK PTE LTD
NAVAL ARCHITECTS, MARINE ENGINEERS & MARINE SURVEYORS.
540 SIMS AVENUE
#02-04 SIMS AVE CENTRE
SINGAPORE 387603
TEL: +65 67417220
FAX: +65 67417219
E-mail: NPL@navnautik.com or navnautik@gmail.com

DRG. NO. : 01/22–H19 (SHT 2 OF 2)
REV :0

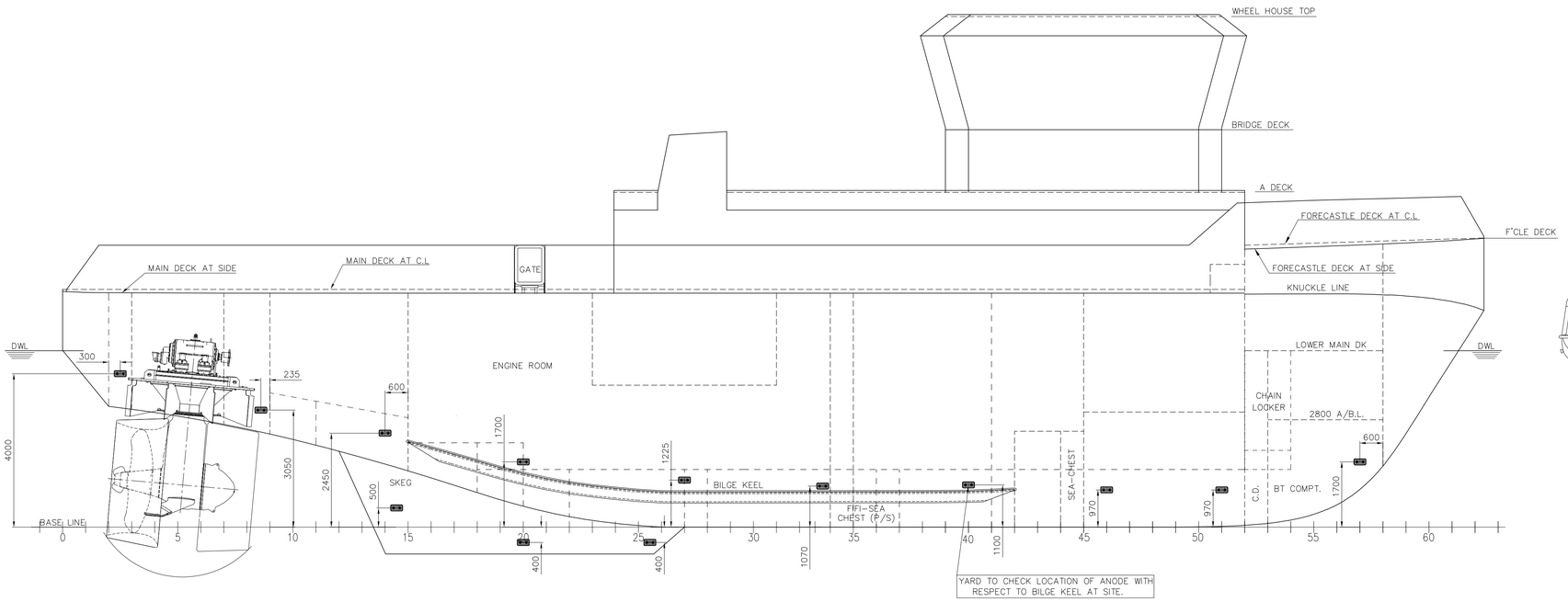

PROFILE VIEW

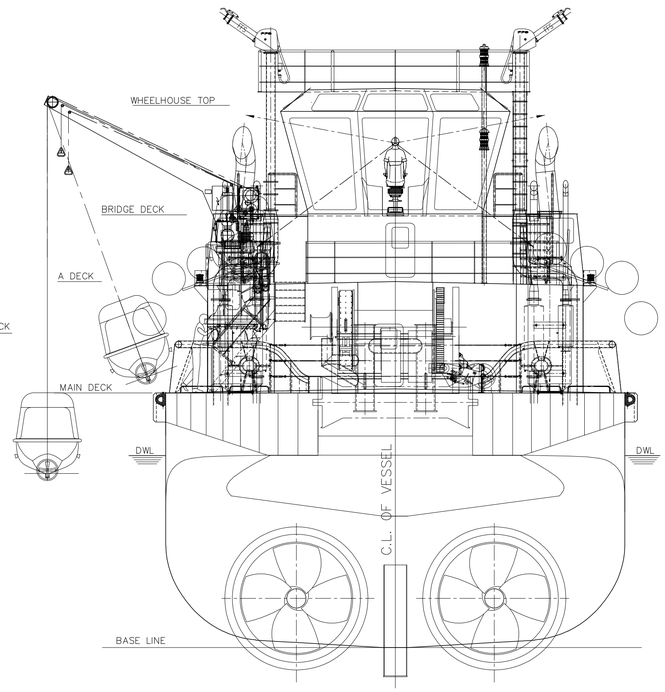

AFT VIEW

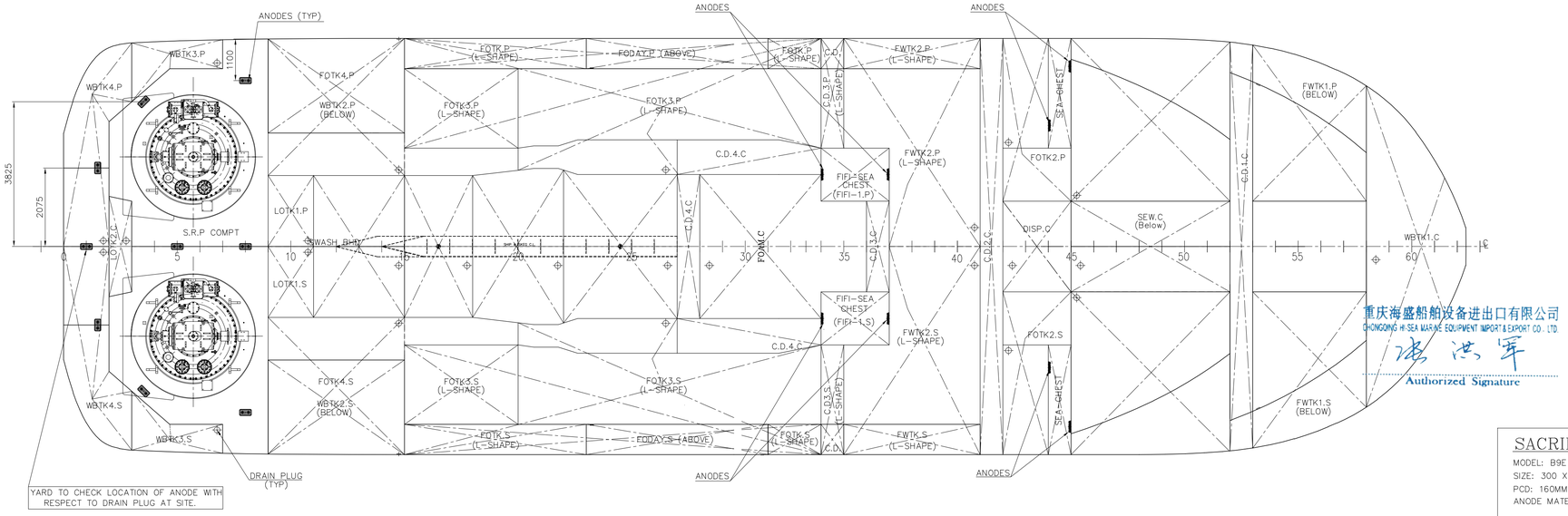

PLAN BELOW MAIN DECK

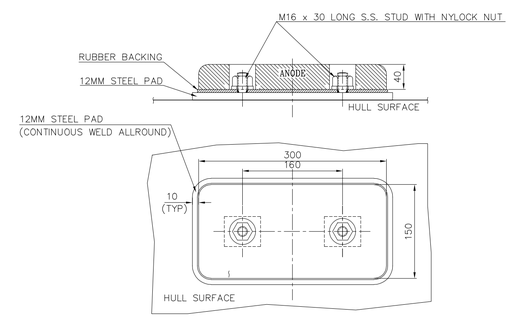

TYPICAL DETAIL OF ANODES
(SCALE 1:5)

重庆海盛船舶设备进出口有限公司
CHONGQING HI-SEA MARINE EQUIPMENT IMPORT & EXPORT CO. LTD.
Authorized Signature

SACRIFICIAL ANODE DETAILS

MODEL: B9E
SIZE: 300 X 150 X 40MM THK
PCD: 160MM
ANODE MATERIAL: ALUMINIUM

QUANTITY SUMMARY:
HULL – 35 pcs (MIDSHIP/STERN/AFT BOTTOM)
FIFI SEA CHEST – 4 pcs
SEA CHEST – 4 pcs

ZINC ANODES IS FOR SEA CHEST ONLY.

NOTE:–

1. DO NOT PAINT THE ANODE & THE STUDS.
2. THIS DRAWING IS FOR VENDOR AND YARD'S REFERENCE ONLY.
3. ACTUAL QUANTITY, LOCATION AND SPECIFICATION OF ANODE IS TO BE DECIDED BY VENDOR AND YARD AS PER SITE CONDITIONS.

REF. DWG.:–

1. DRAIN PLUG DISPOSITION & DETAIL – DWG. NO.–01/22–H39
2. SKEG DETAIL – DWG. NO.–01/22–H24
3. HULL CONSTRUCTION – BLOCK 2 – DWG. NO.–01/22–H252
4. SEA CHEST STRAINER – DWG. NO.–01/22–H58
5. DOCKING PLAN – DWG. NO.–01/22–H49
6. BILGE KEEL CONSTRUCTION – DWG. NO.–01/22–H12

REV	DESCRIPTION OF ALTERATION	DATE	BY

REV	DESCRIPTION OF ALTERATION	DATE	BY

1. ALL STEEL MATERIAL ARE BV GRADE–A UNLESS STATED OTHERWISE.
2. YARD IS ADVISED NOT TO FABRICATE UNTIL DWG. IS APPROVED BY CLASS.
3. "HOLD" MARK ON DWG. INDICATES CLASS APPROVAL PENDING.

DRAWN : garai	SCALE : 1 : 75	PROJECT : 70T BOLLARD PULL TUG	DESIGNER : NAVNAUTIK PTE LTD NAVAL ARCHITECTS, MARINE ENGINEERS & MARINE SURVEYORS. 540 SIMS AVENUE #02–04 SIMS AVE CENTRE SINGAPORE 387603 TEL: +65 67417220 FAX: +65 67417219 E–mail: NPL@navnautik.com or navnautik@gmail.com
CHECKED : NAV	CLIENT'S HULL NO. : NB786 & NB787	TITLE : LOCATION OF ANODES AND FIXING ARRGT. (PROPOSAL)	
DATE : 13.02.2024		BUILDER : KHULNA SHIPYARD LIMITED, BANGLADESH	
APPROVED BY CLASS DATED :		OWNER : PAYRA PORT AUTHORITY, BANGLADESH	DRG. NO. : 01/22–H51 (SHT 1 OF 1) REV :0
APPROVED BY OWNER DATED :			